Model-Based X, Virtual Prototyping, 42, SoCs, Sensor Networks, and Other Stories

Florence Maraninchi
www-verimag.imag.fr/~maraninx
joint work with... the whole "synchronous" group

Verimag / University of Grenoble

14th SYNCHRON
Open Workshop on Synchronous Programming
Bamberg, november 26-30, 2007

Other Related Talks from the VERIMAG Synchronous Group

- Nicolas Halbwachs and Erwan Jahier: virtual prototyping in AADL and Lustre
- Tayeb Bouhadiba: the model of components 42
- Olivier Bezet: abstraction problems in virtual prototypes of sensor networks
- ...

1 What you can (already) do with the synchronous language Lustre (Summary)

2 Model-Based Engineering and Virtual Prototyping

3 42, a Model of Components

4 Towards MBE and VP *à la* 42

5 Provocative Comments

Around Lustre...

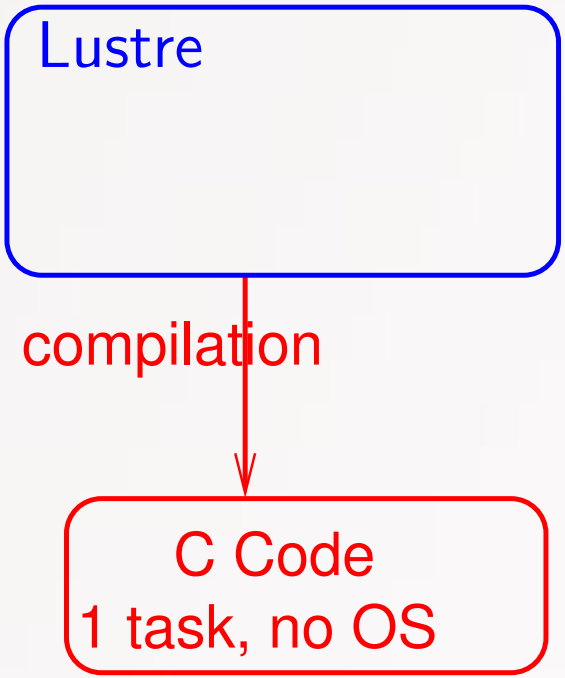

Around Lustre...

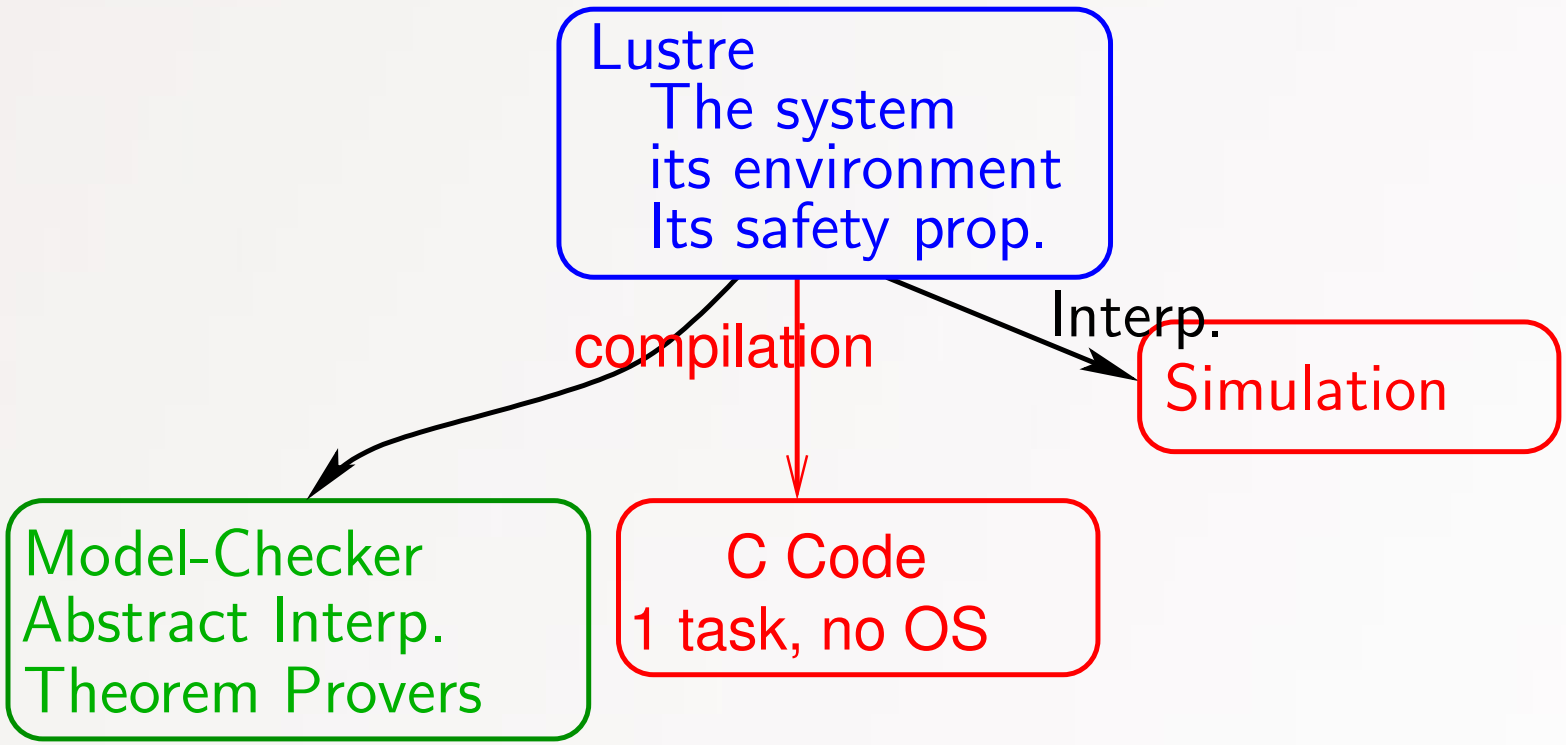

Around Lustre...

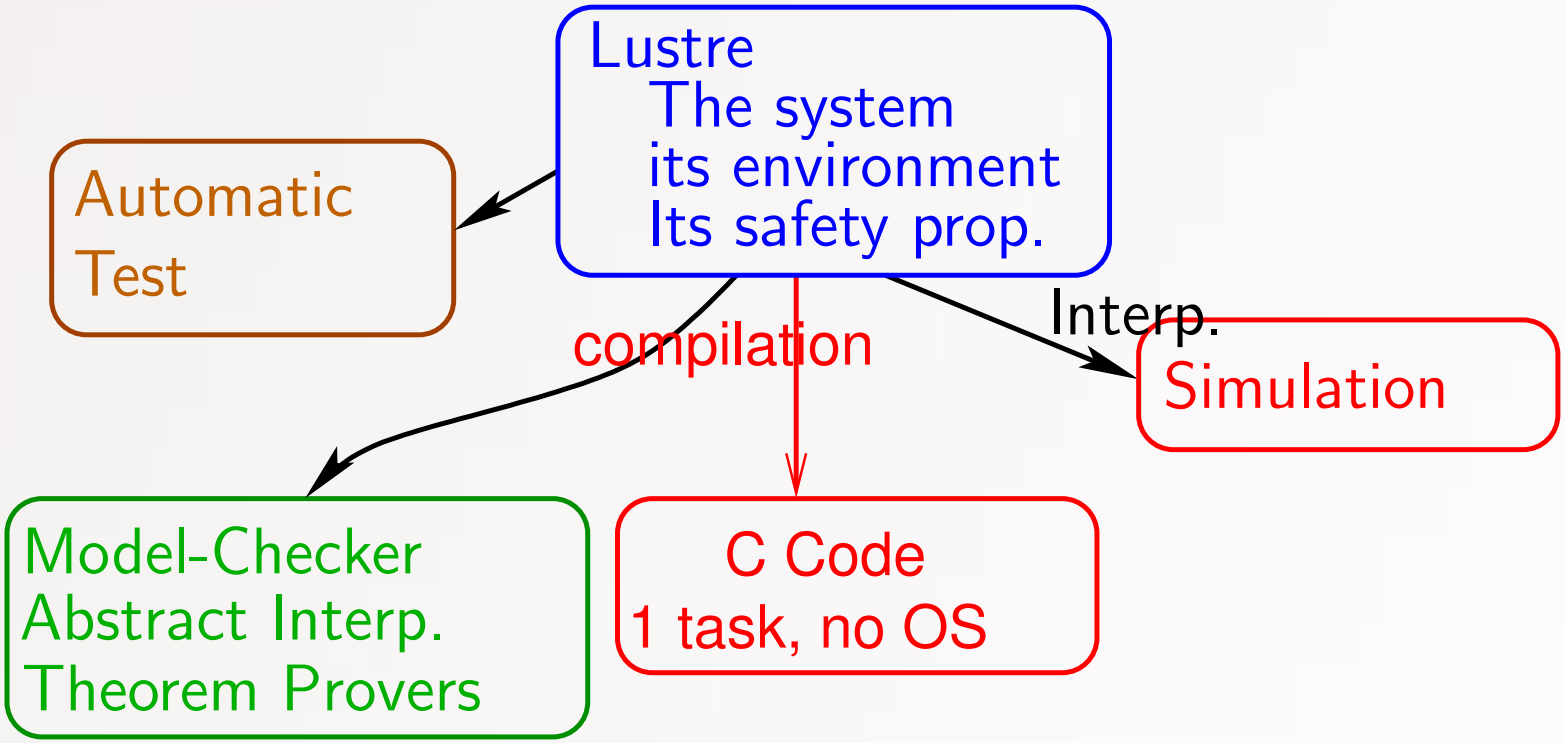

Around Lustre...

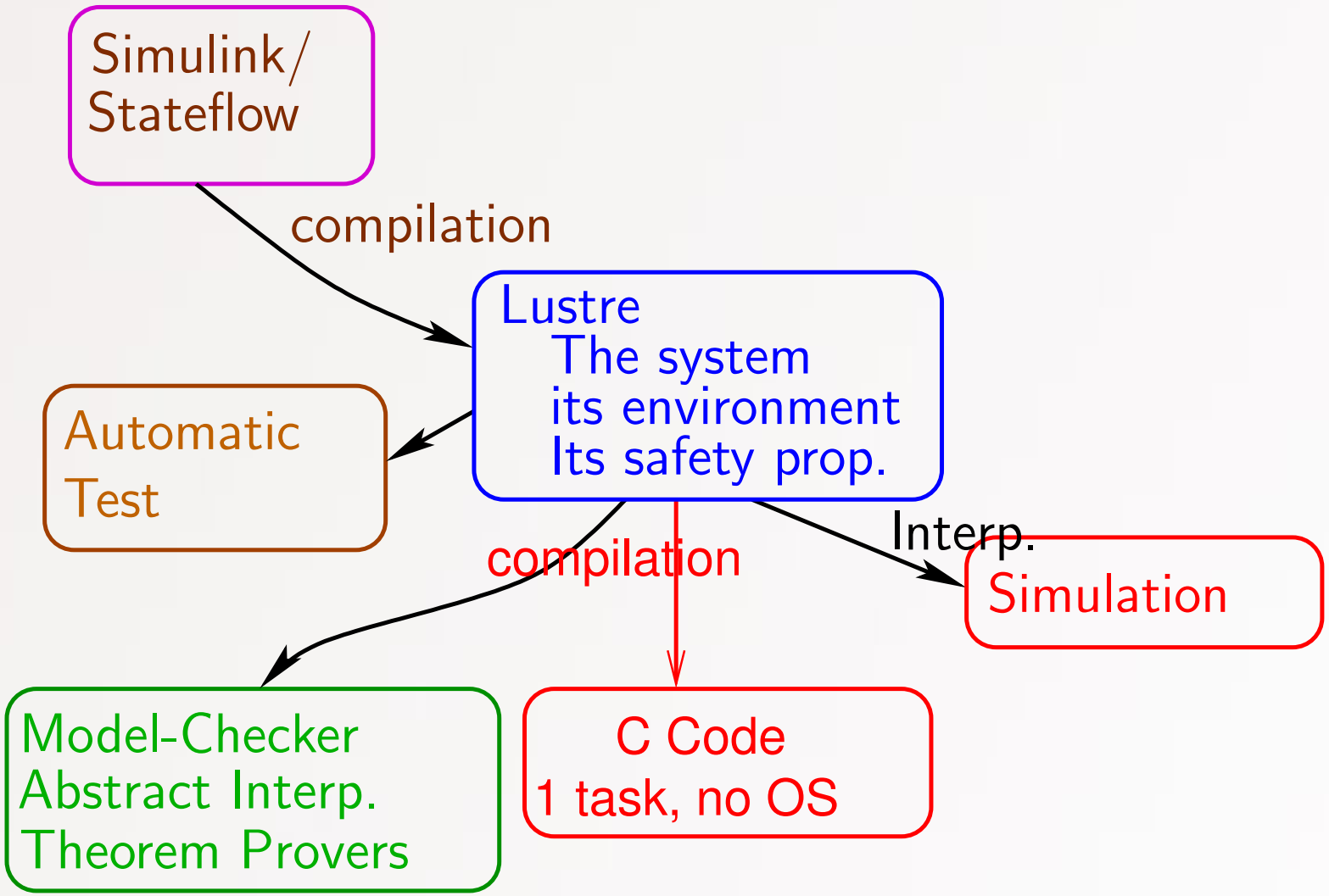

Around Lustre...

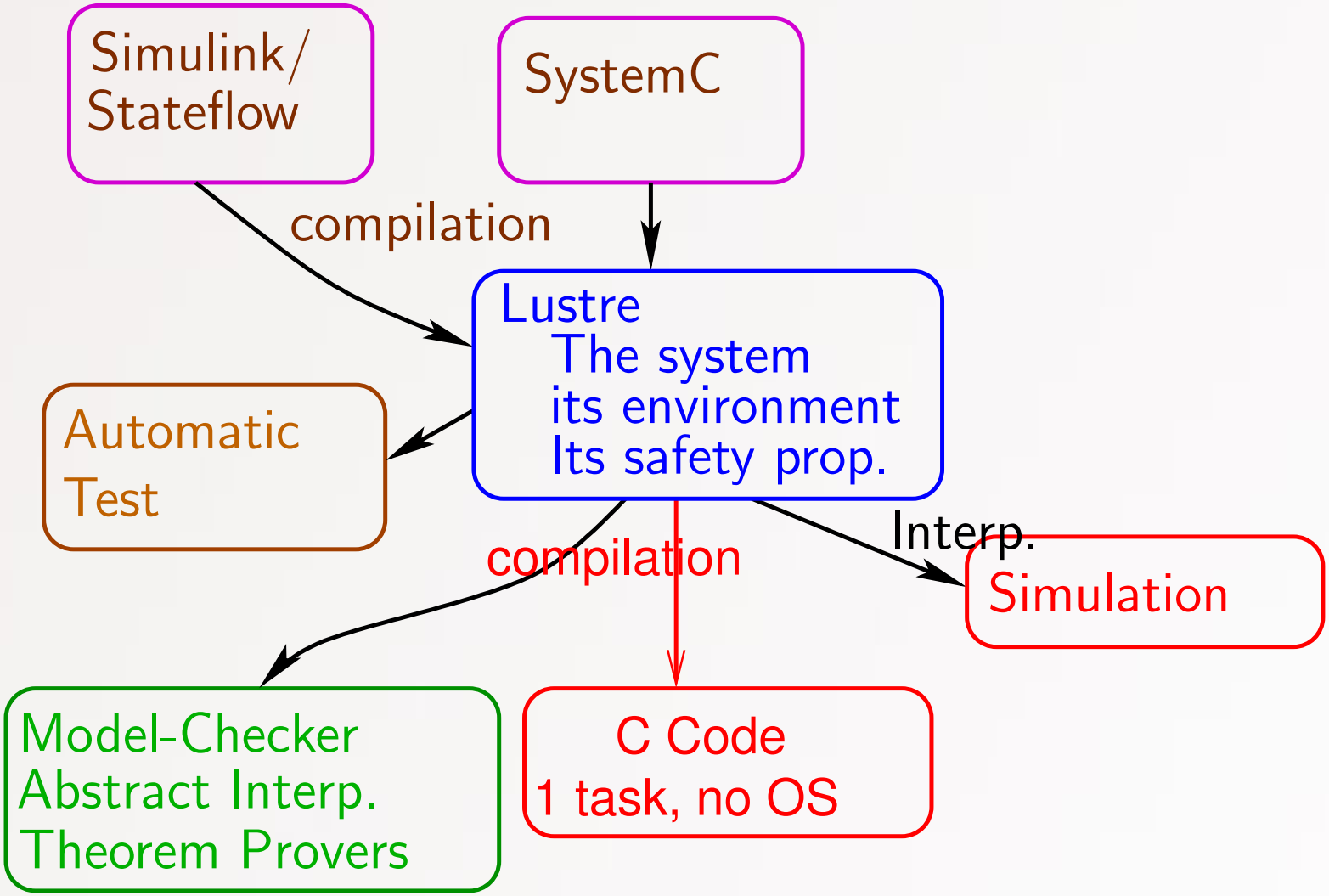

Around Lustre...

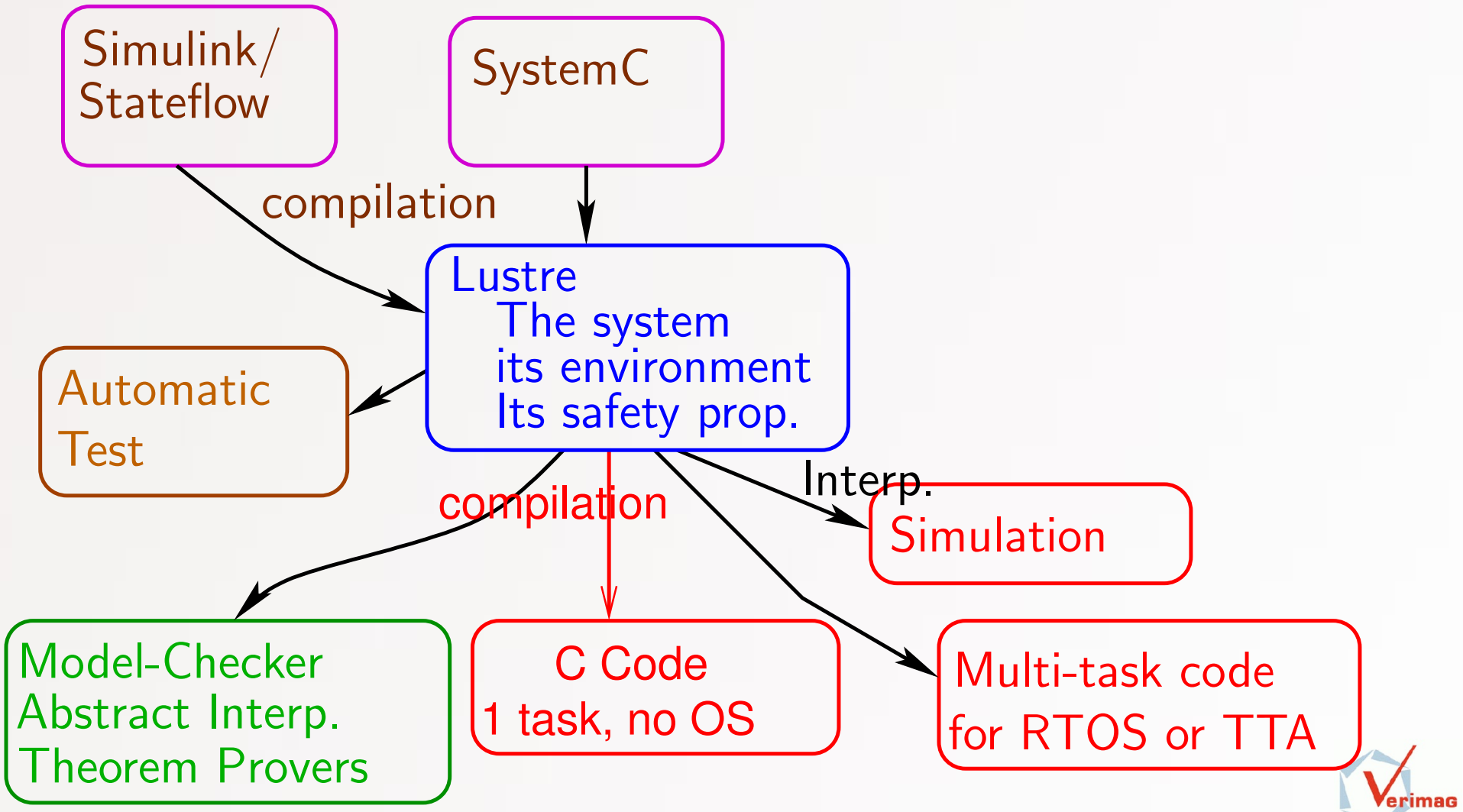

Around Lustre...

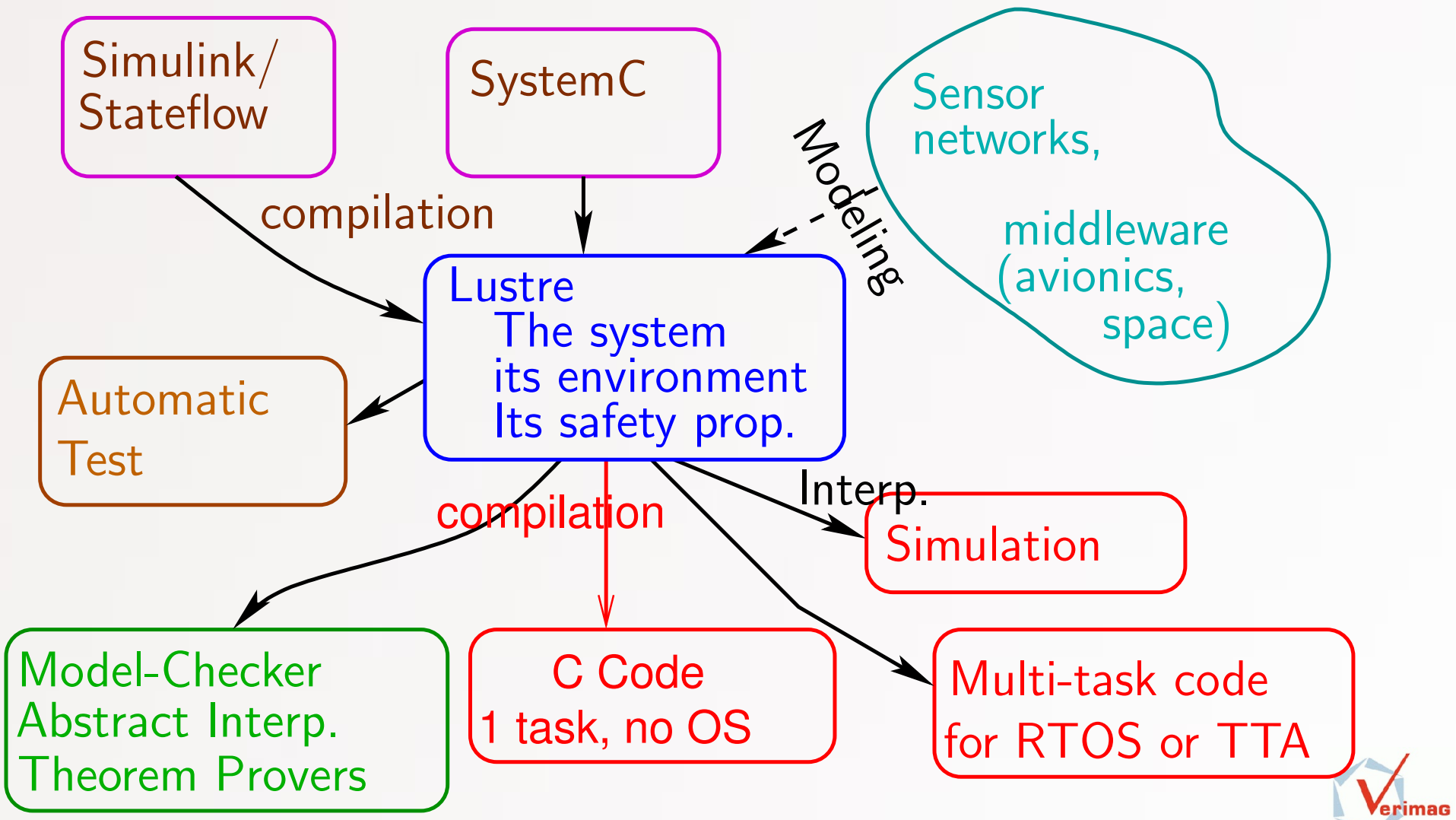

Around Lustre...

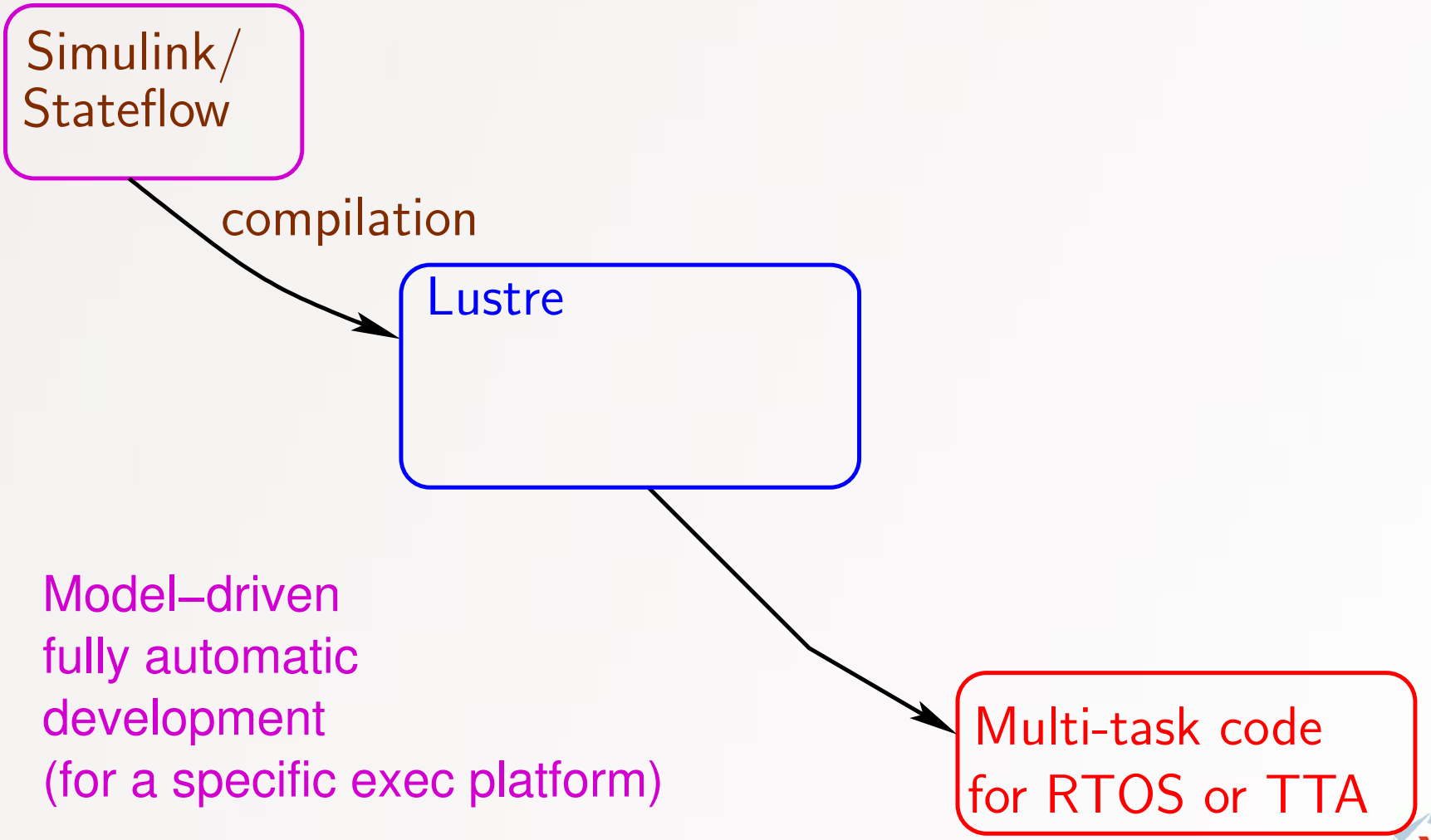

Around Lustre...

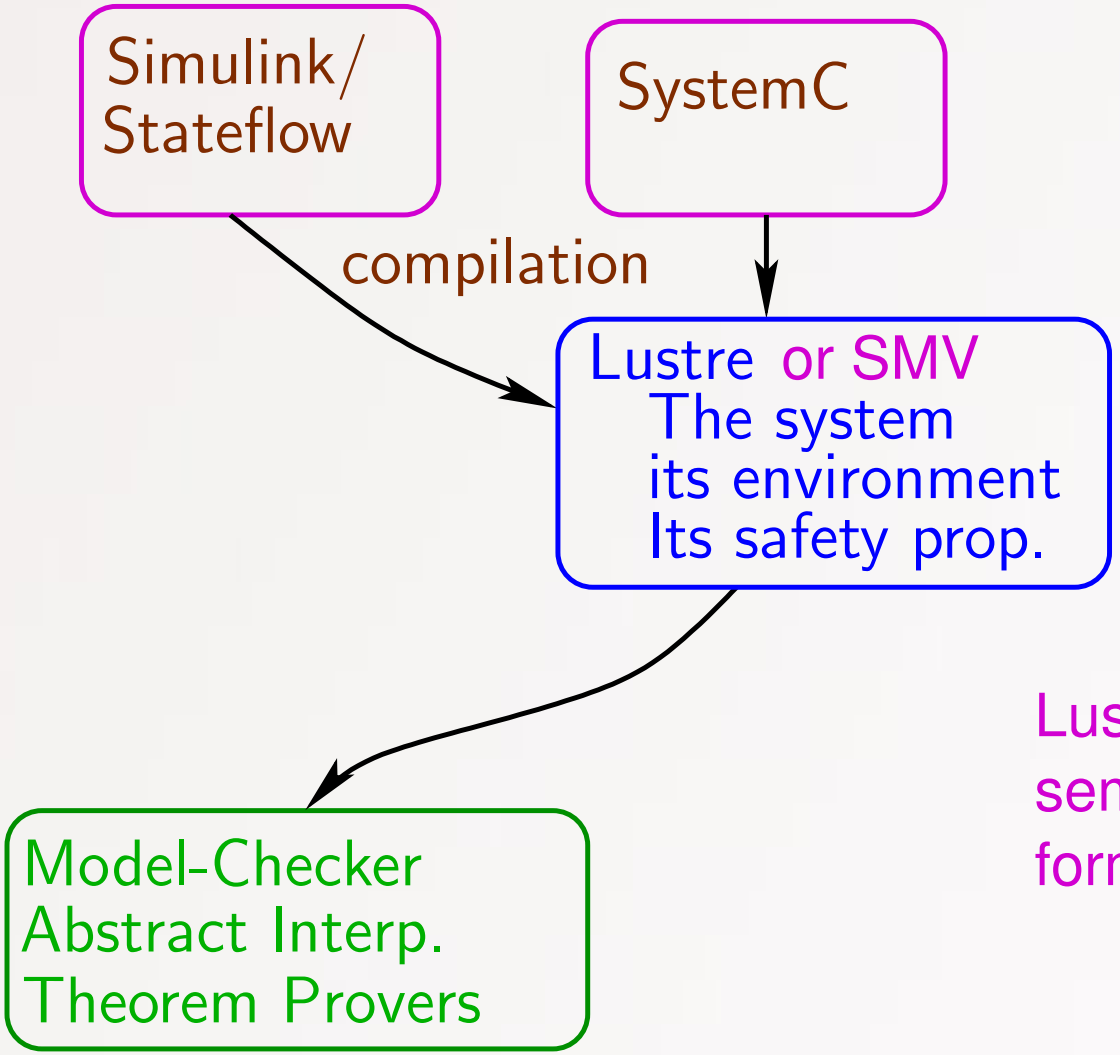

Lustre as an executable semantics definition formalism

Around Lustre...

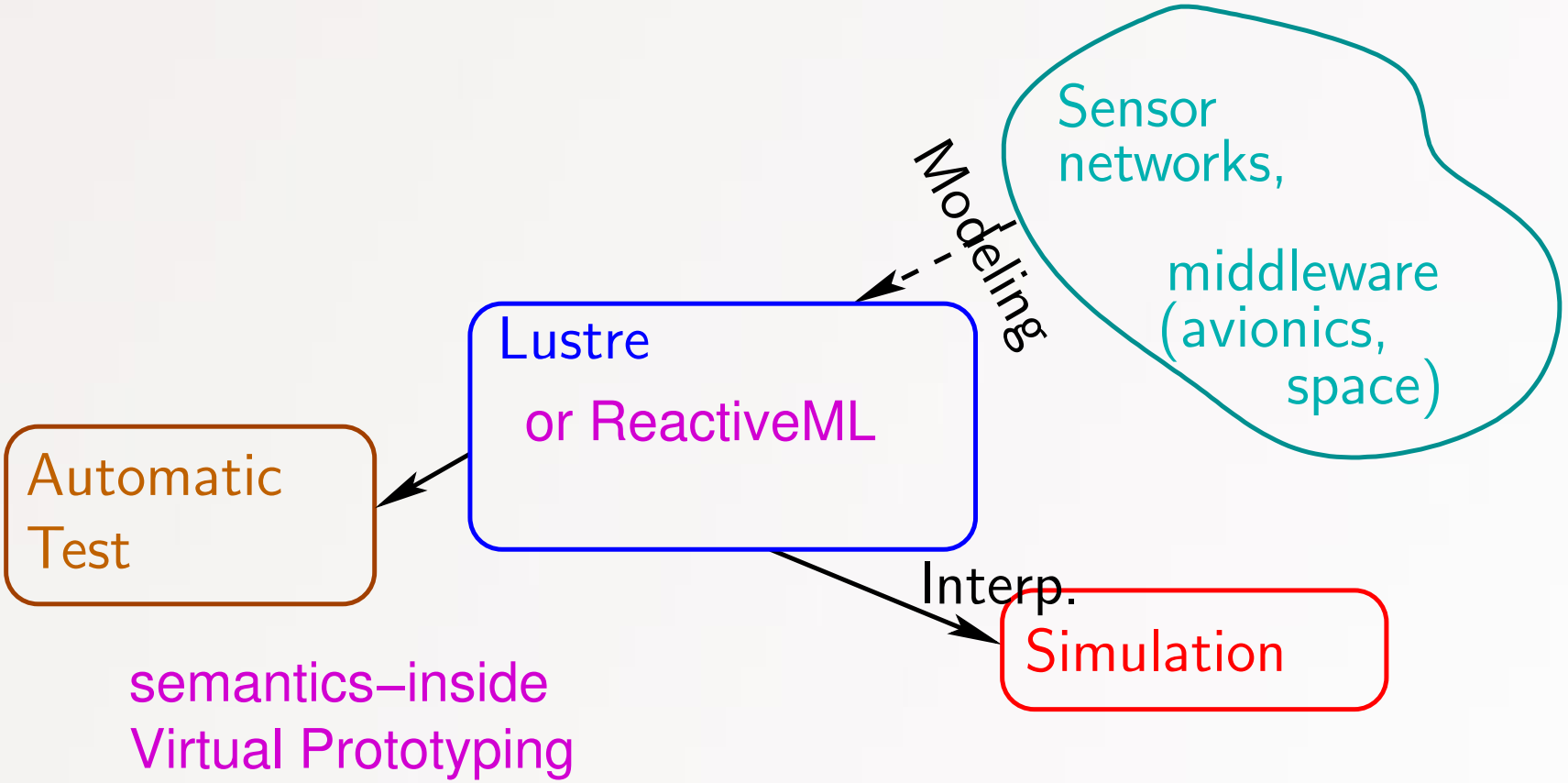

Current Research Directions and Industrial Collaborations

- Language Design, Code Generation (Lustre, AOP, ...)
- Formal Verification (Model-checking, abstract interpretation)
- Automatic Test-Case Generation from a Model of the Environment
- Model-Driven and Virtual Prototyping with synchronous languages and/or engineering languages (SystemC, Simulink, ...)
- Component-Based Approaches

Past or Ongoing Projects with:
EsterelTechnologies, Polyspace, Airbus, Schneider Electric, STMicroelectronics, Thomson, Astrium-EADS, Audi, Renault, RATP, FranceTelecom R&D, Coronis Systems, KeesDA, TTTech, DOCEA Power, ...
+ Minalogic Partners

1 What you can (already) do with the synchronous language Lustre (Summary)

2 Model-Based Engineering and Virtual Prototyping
- General (Simplified) Picture
- Virtual Prototyping with Transactional Models
- Virtual Prototyping of Sensor Networks with Synchronous Languages and Tools
- On Abstraction and Faithfulness

3 42, a Model of Components

4 Towards MBE and VP *à la* 42

5 Provocative Comments

2 Model-Based Engineering and Virtual Prototyping

- General (Simplified) Picture
- Virtual Prototyping with Transactional Models
- Virtual Prototyping of Sensor Networks with Synchronous Languages and Tools
- On Abstraction and Faithfulness

Model-Based Eng. vs Virtual Prototyping

High–Level Models

Model-Based Eng. vs Virtual Prototyping

High–Level Models

Implementation

Model-Based Eng. vs Virtual Prototyping

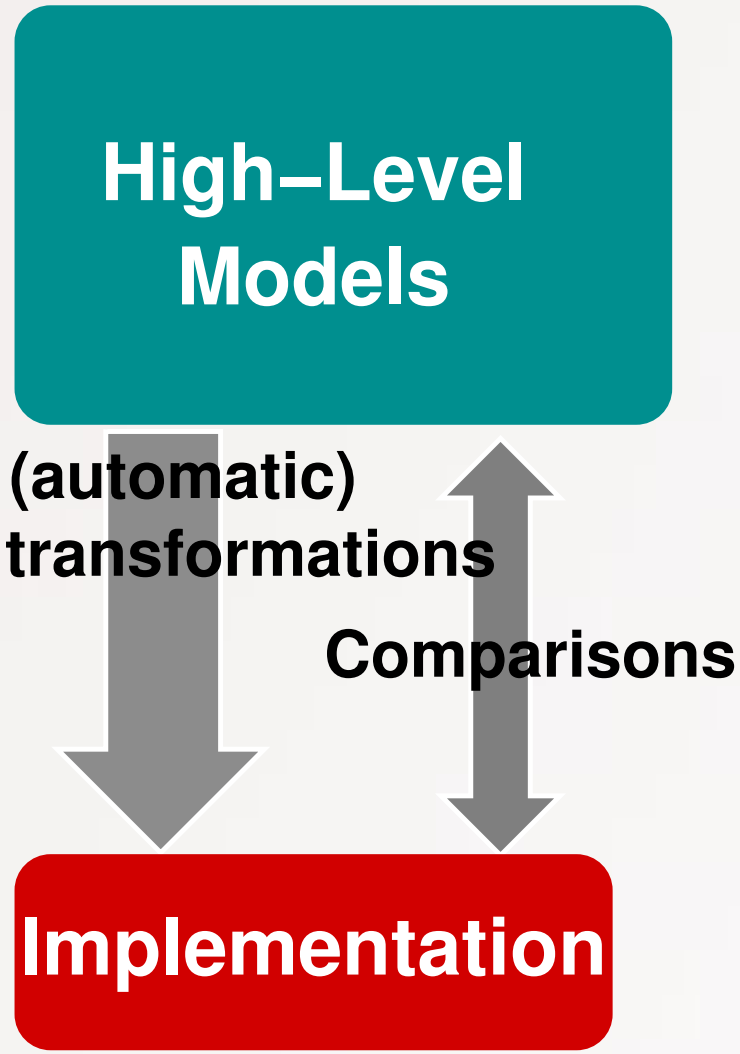

Model-Based Eng. vs Virtual Prototyping

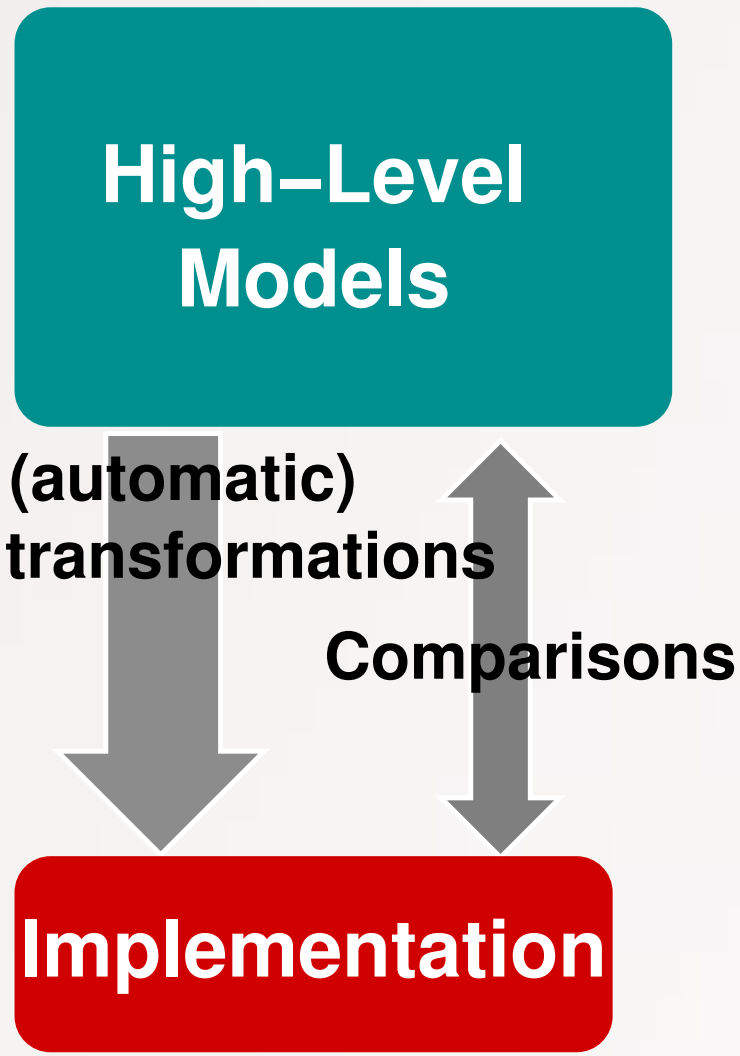

An Example (Caspi et al., VERIMAG)

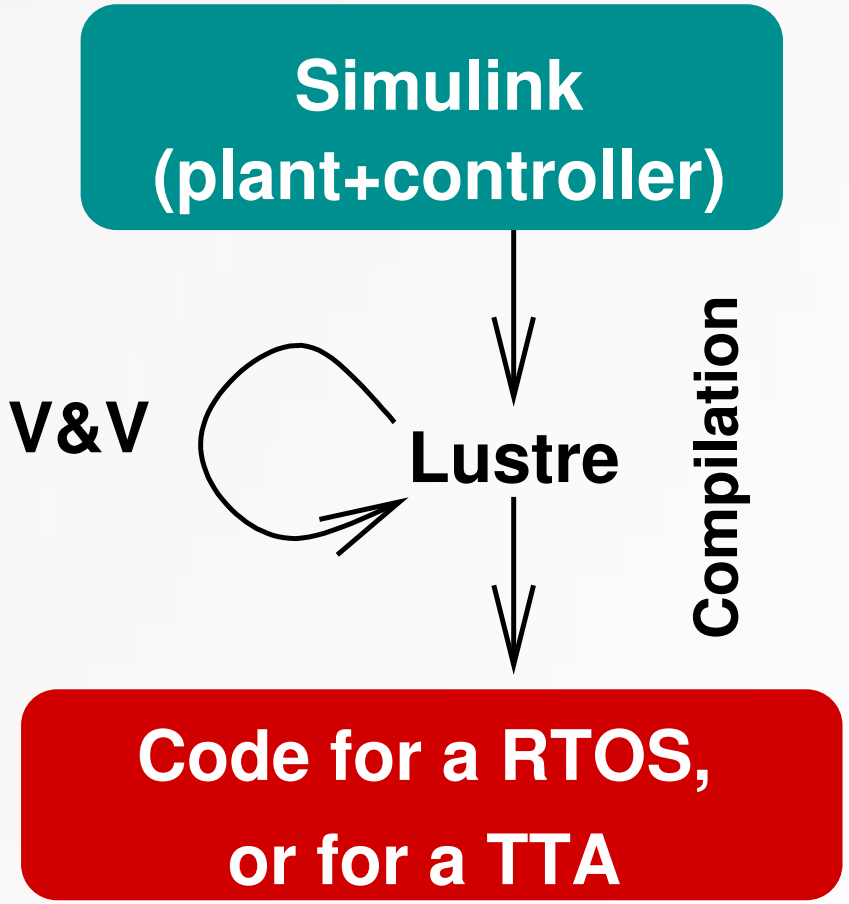

Model-Based Eng. vs Virtual Prototyping

High–Level Models

Model-Based Eng. vs Virtual Prototyping

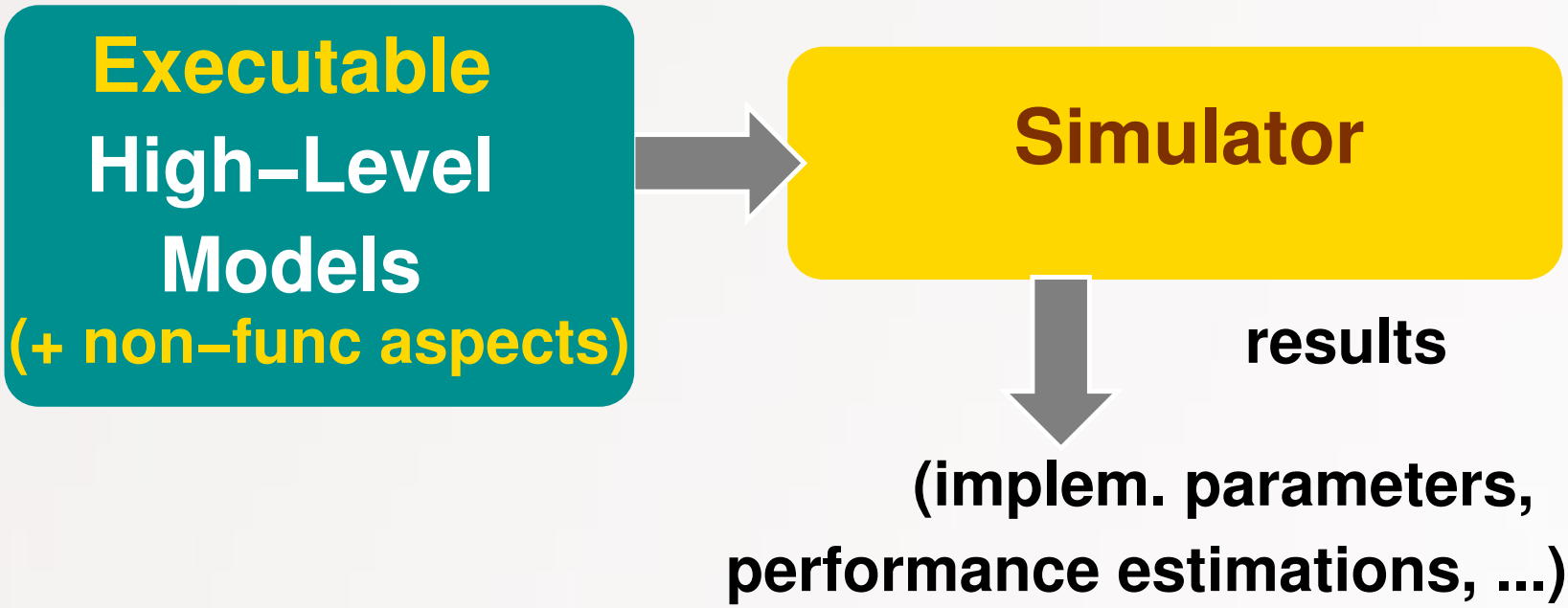

Model-Based Eng. vs Virtual Prototyping

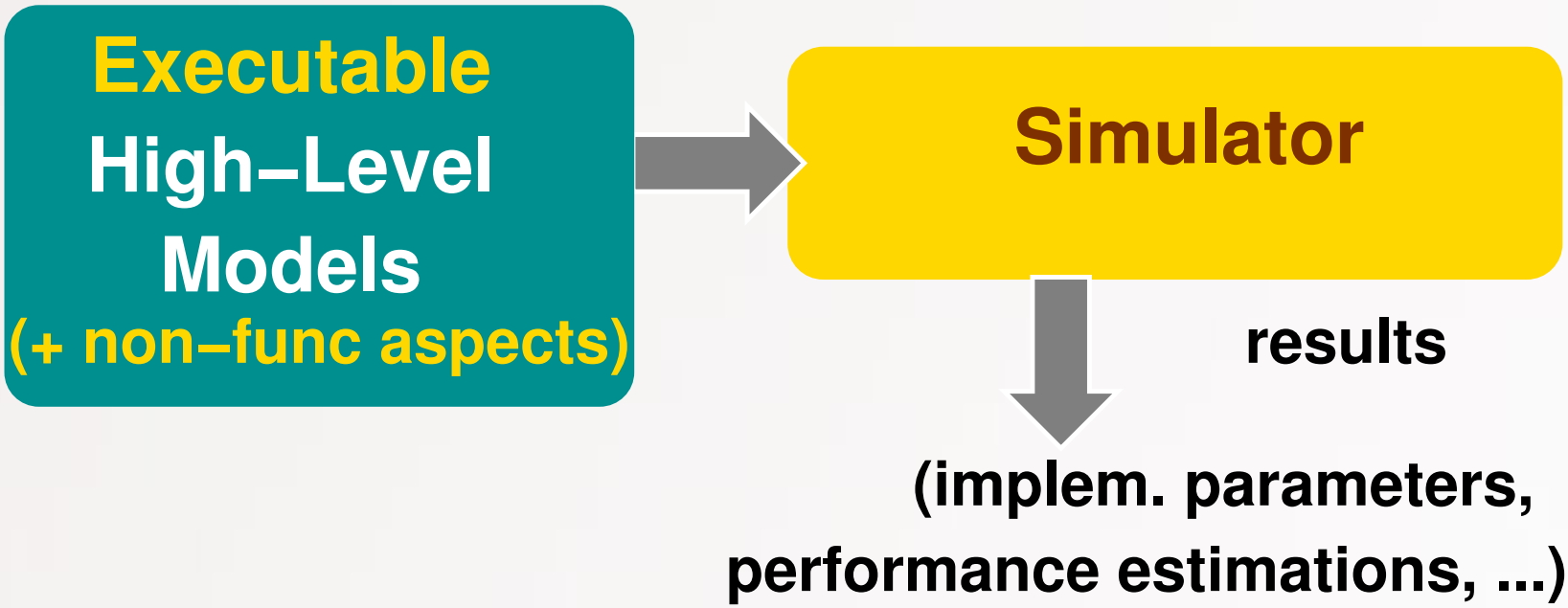

Example 1:

Transaction–Level Modeling (TLM)

of Systems–on–a–Chip (with SystemC)

Model-Based Eng. vs Virtual Prototyping

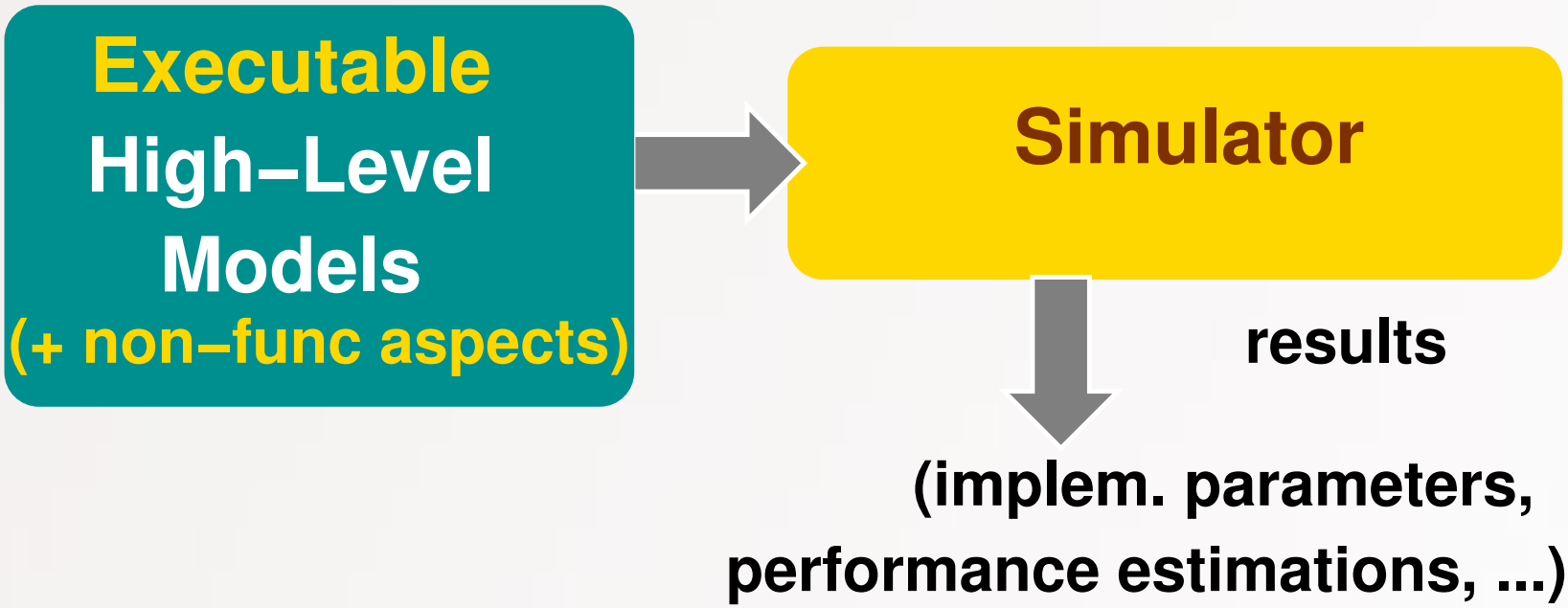

Example 2:

Virtual Prototyping of Sensor Networks with NS, NAB, opnet, ...
(modeling energy consumption)

Model-Based Eng. plus Virtual Prototyping

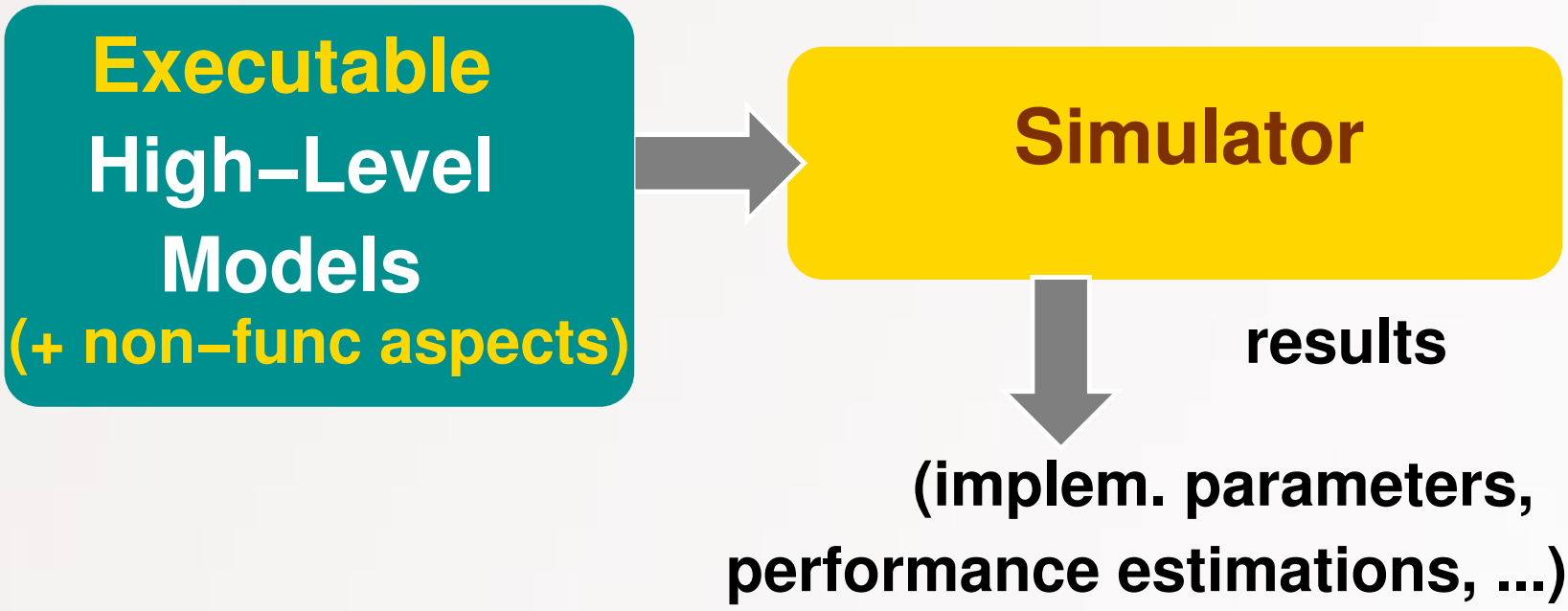

Example 3 (FM et al., VERIMAG):

(semantics inside, component–based)

Virtual Prototyping of Sensor Networks

(fine–grain modeling of energy consumption)

Model-Based Eng. plus Virtual Prototyping

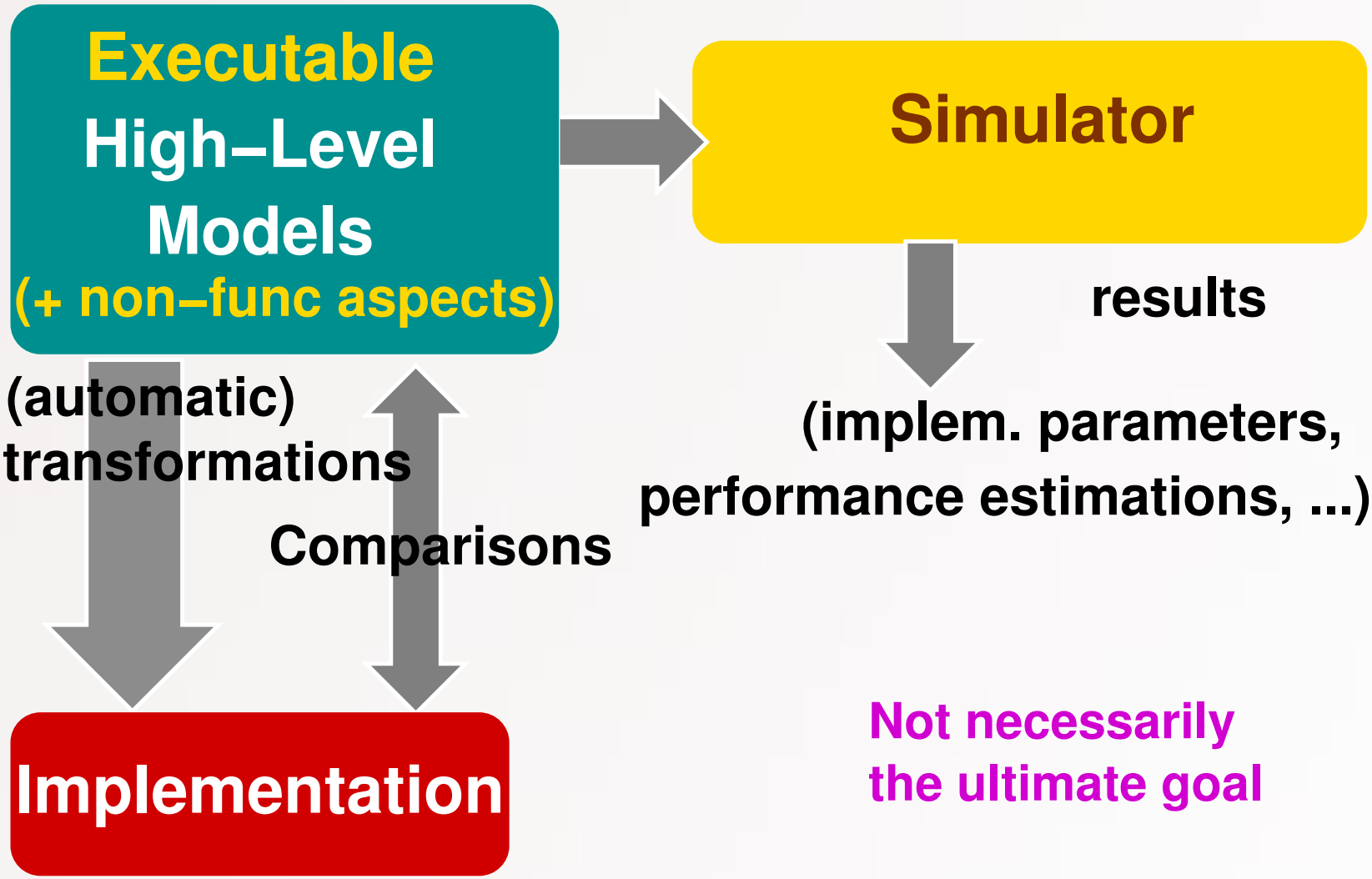

2 Model-Based Engineering and Virtual Prototyping

- General (Simplified) Picture
- Virtual Prototyping with Transactional Models
- Virtual Prototyping of Sensor Networks with Synchronous Languages and Tools
- On Abstraction and Faithfulness

The MINALOGIC/openTLM Context

A Minalogic project (90 person.year)
open-source tools for transaction-level modeling of systems-on-a-chip.
STMicroelectronics, Thomson, KeesDA, Orange-Silicomp, CEA-LETI, TIMA, INRIA, VERIMAG

STMicroelectronics + VERIMAG working group since 2002:
3 PhDs, 1 starting 01/08
some publications: EMSOFT'05, ACSD'05, J. DAES 06, FMCAD'06, FMICS'06, SPIN'07, DATE'08

The openTLM Context: Systems-on-a-Chip

RTL

Synthesizable+

Cycle and Data Accurate+

Slow Simulations–

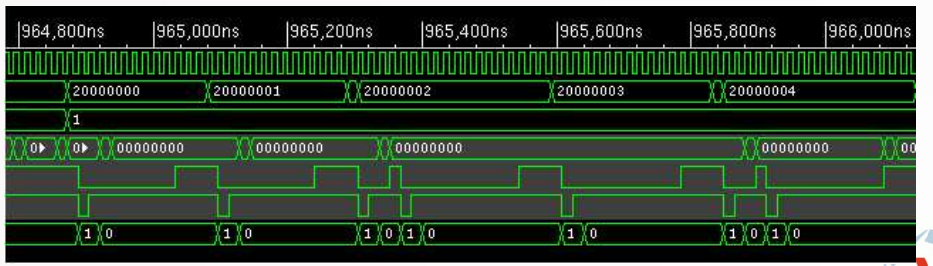

The openTLM Context: Systems-on-a-Chip

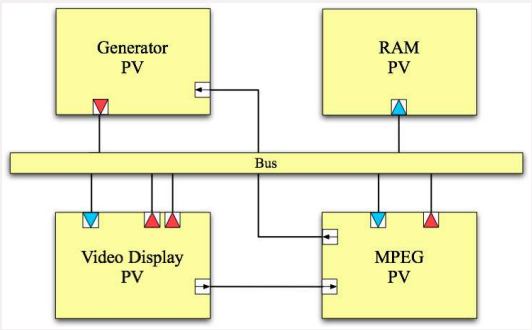

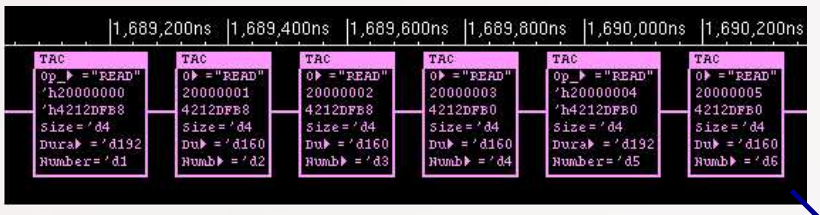

TLM

\+ Early Available

\+ Fast Simulations

– Not synthesizable

Bit Accurate, but: asynchronous, non–deterministic

No automatic transformations

RTL

Synthesizable+

Cycle and Data Accurate+

Slow Simulations–

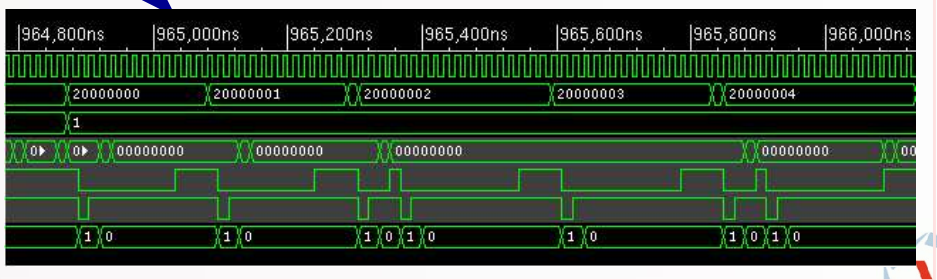

Virtual Prototyping for other Systems

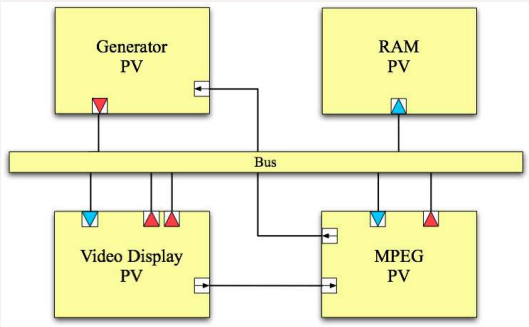

TLM

+ Early Available

+ Fast Simulations

Virtual Prototyping for other Systems

A Virtual Prototype of the Embedded Execution Platform

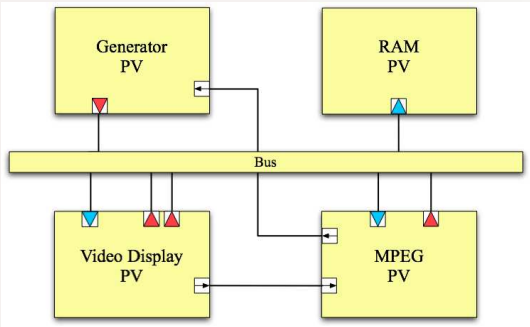

TLM

+ Early Available

+ Fast Simulations

Main problems:

-- Faithfulness of the model

-- Automatic Testing of the Embedded Software

2 Model-Based Engineering and Virtual Prototyping

- General (Simplified) Picture
- Virtual Prototyping with Transactional Models
- Virtual Prototyping of Sensor Networks with Synchronous Languages and Tools
- On Abstraction and Faithfulness

Sensor Networks and Energy Consumption

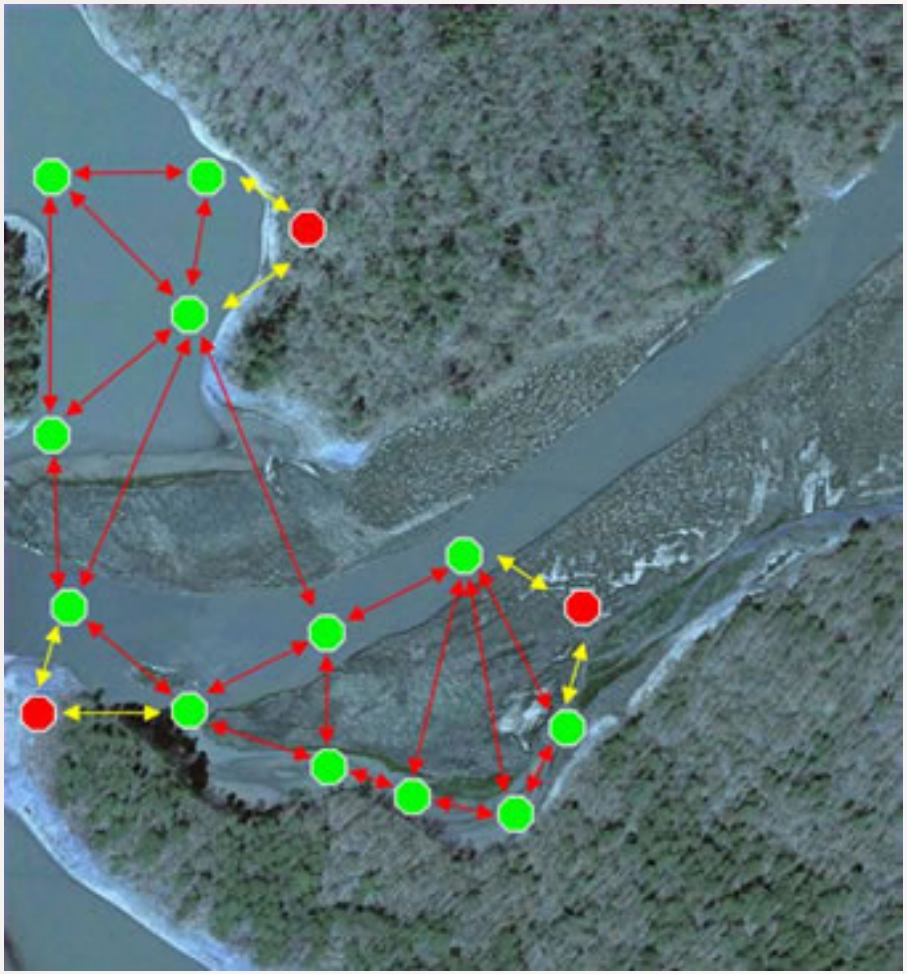

Several thousands of sensors communcating by radio + a special node connected to the network (the sink).

Examples: detection of a radioactive cloud, ...

The node itself

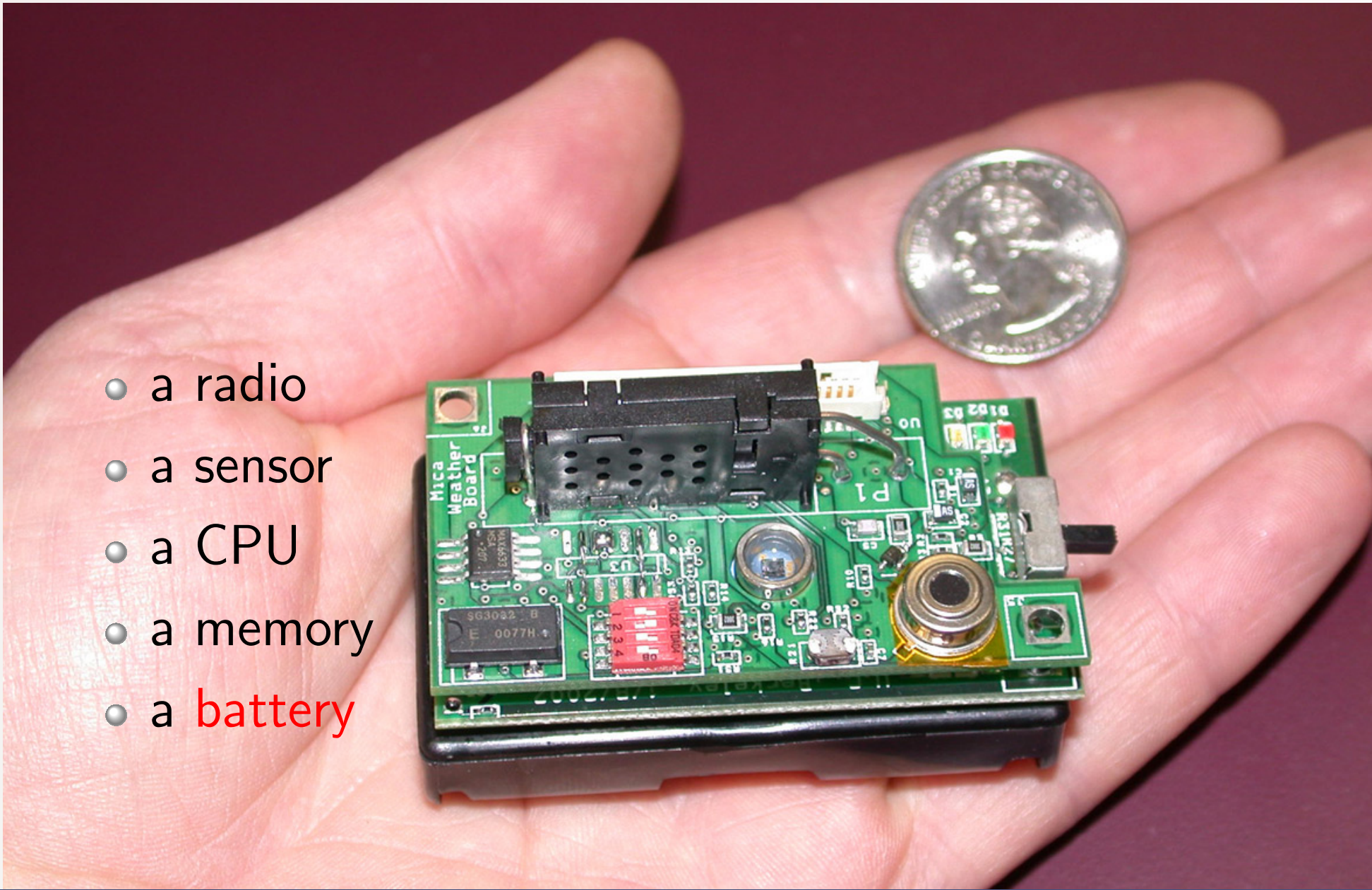

- a radio
- a sensor
- a CPU
- a memory
- a battery

The Structure of the Virtual Prototype

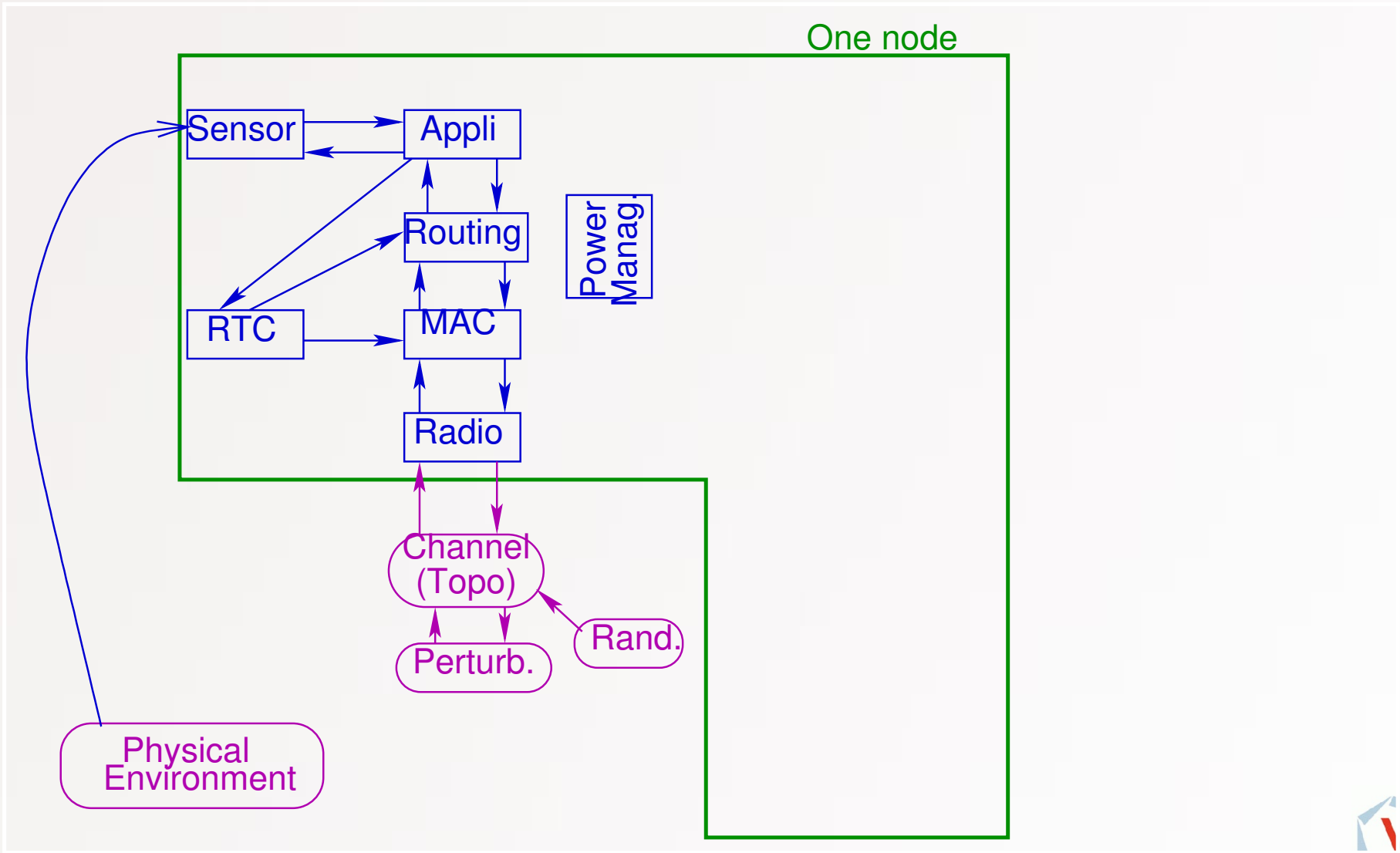

The Structure of the Virtual Prototype

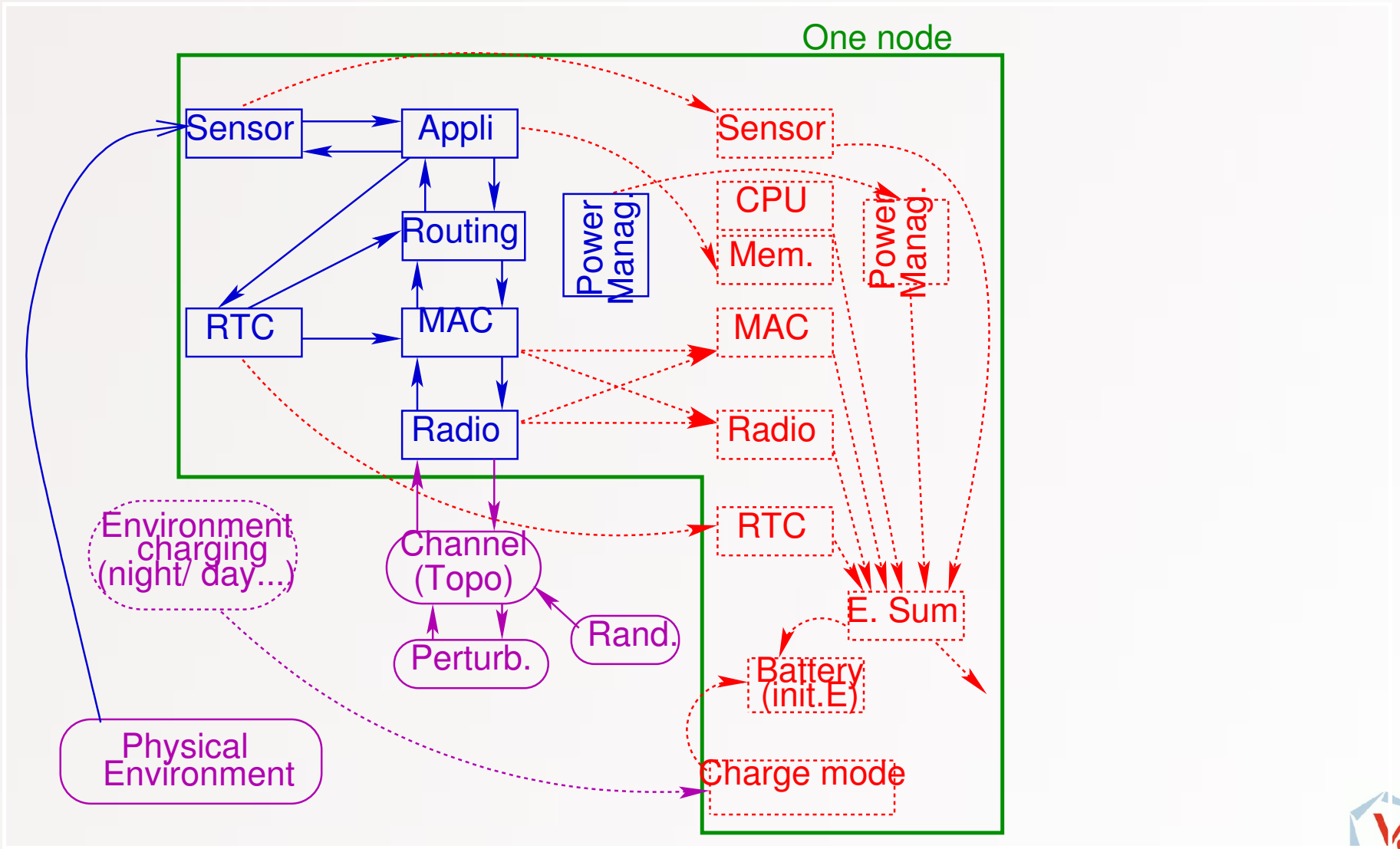

The Structure of the Virtual Prototype

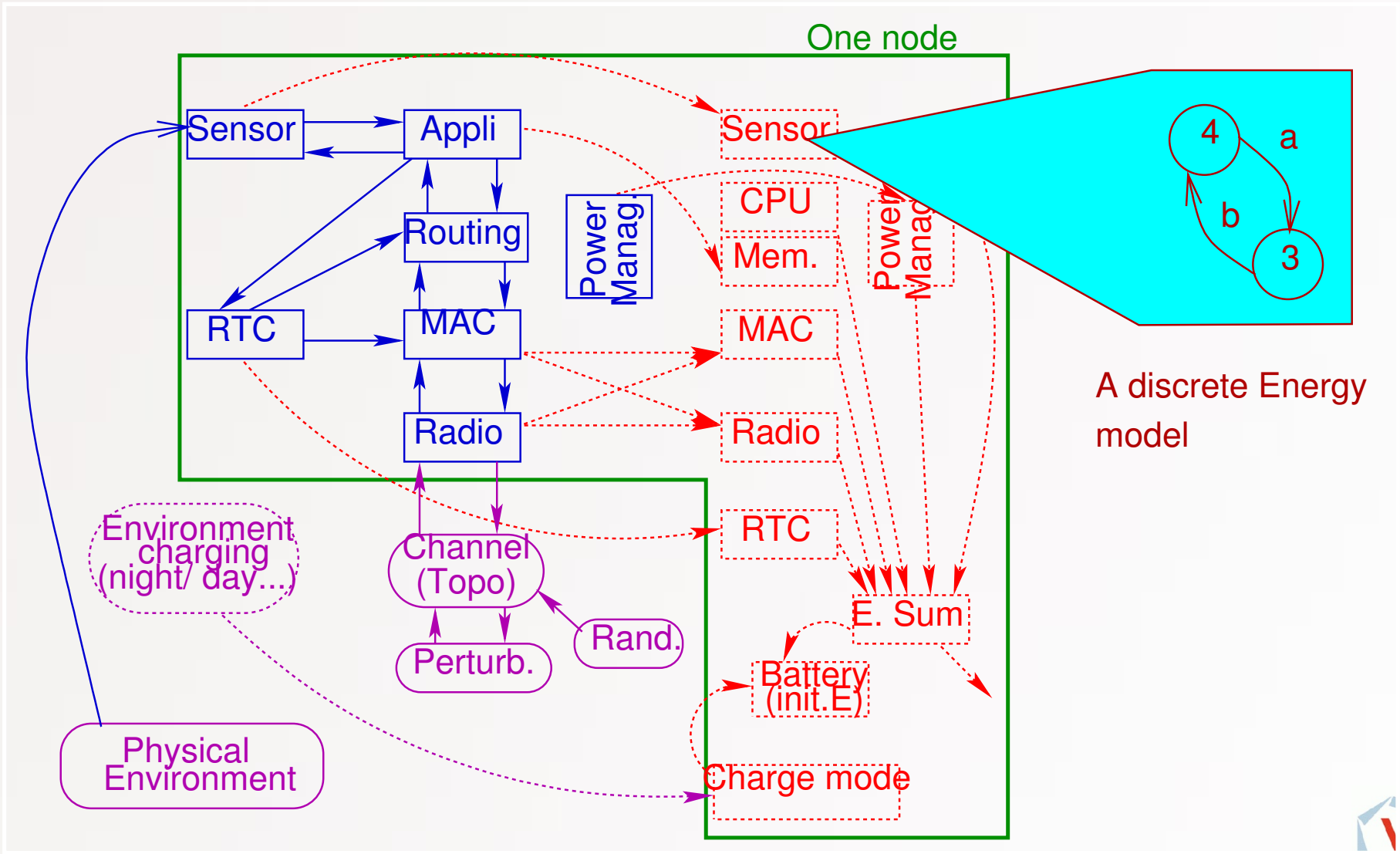

The Structure of the Virtual Prototype

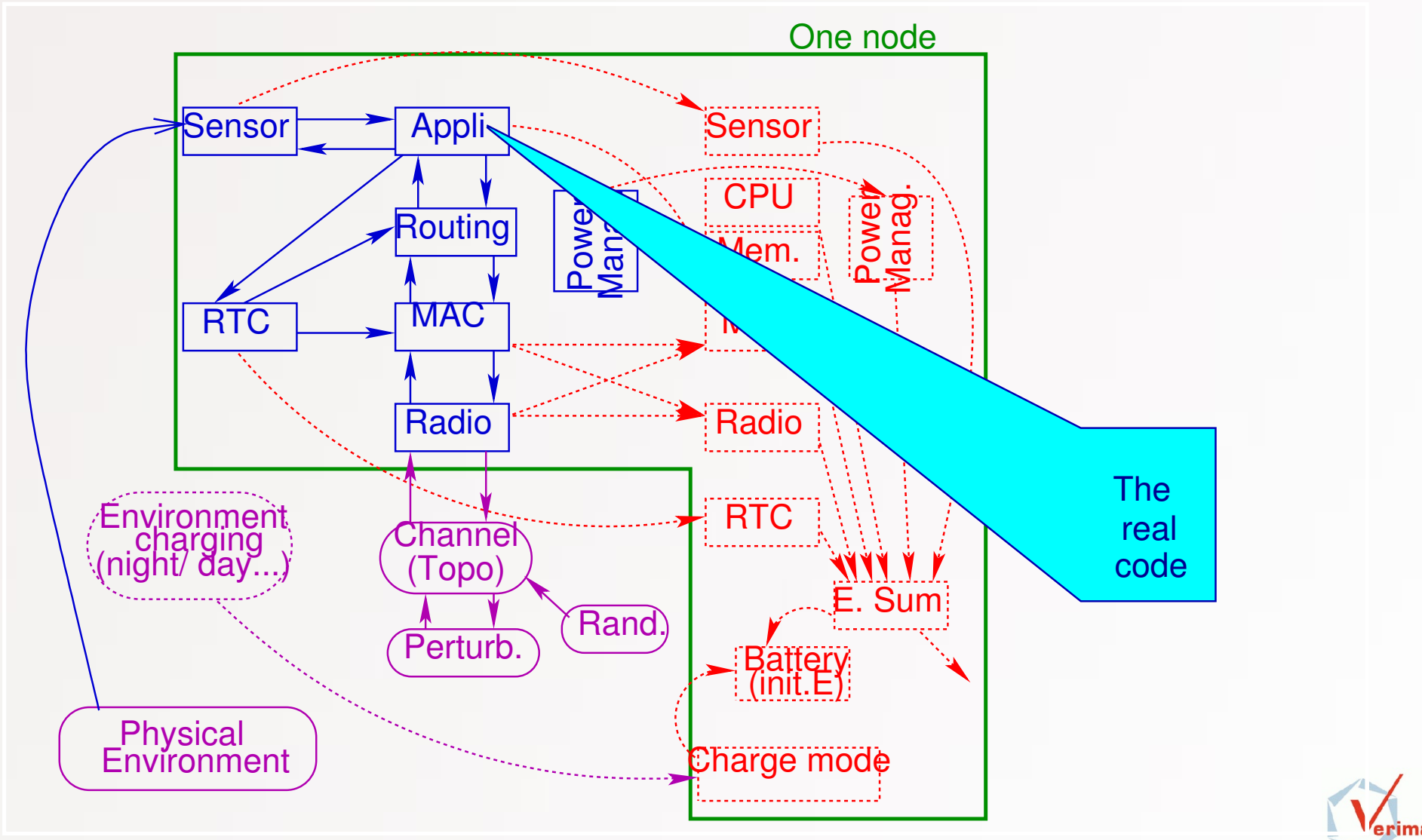

The Structure of the Virtual Prototype

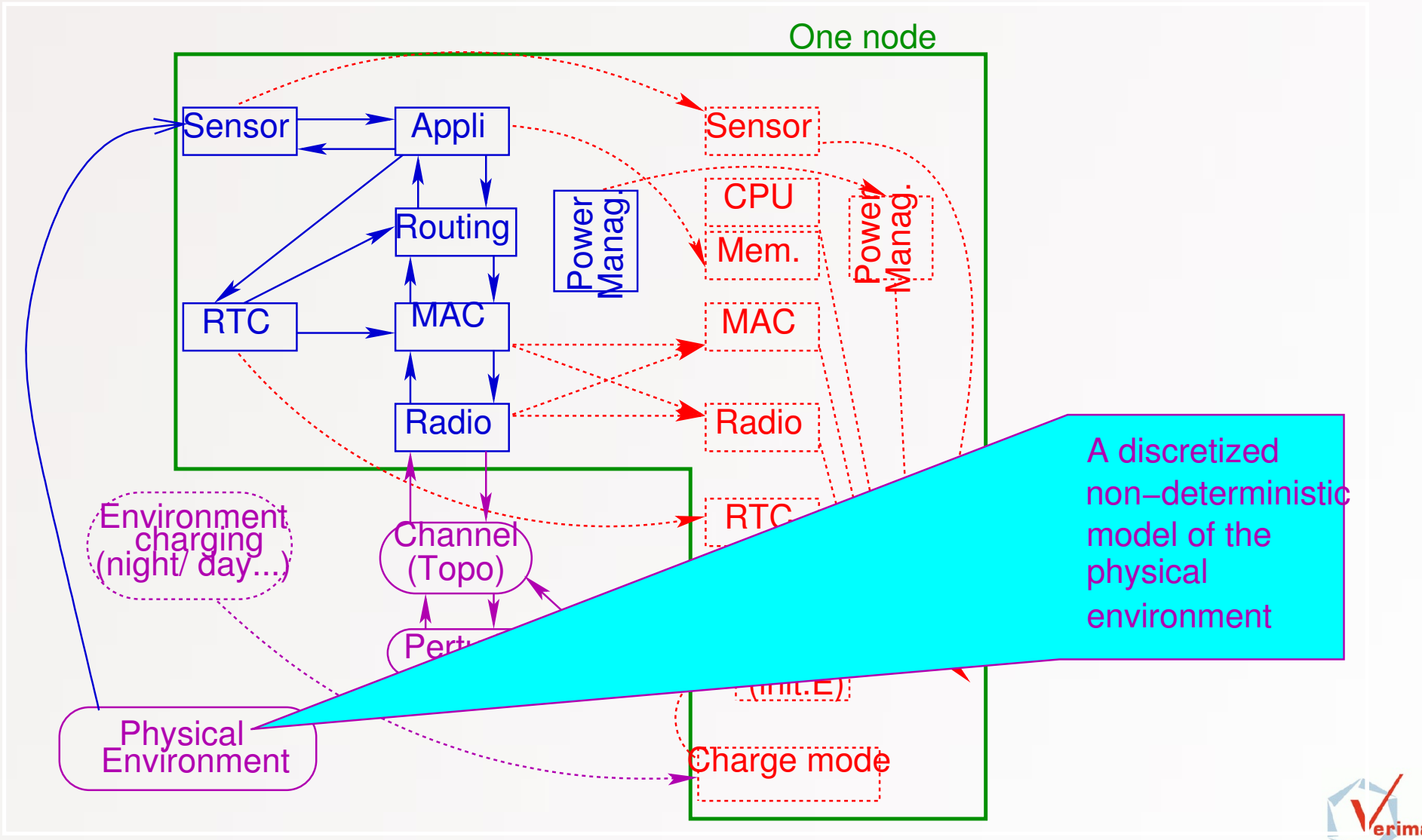

The Structure of the Virtual Prototype

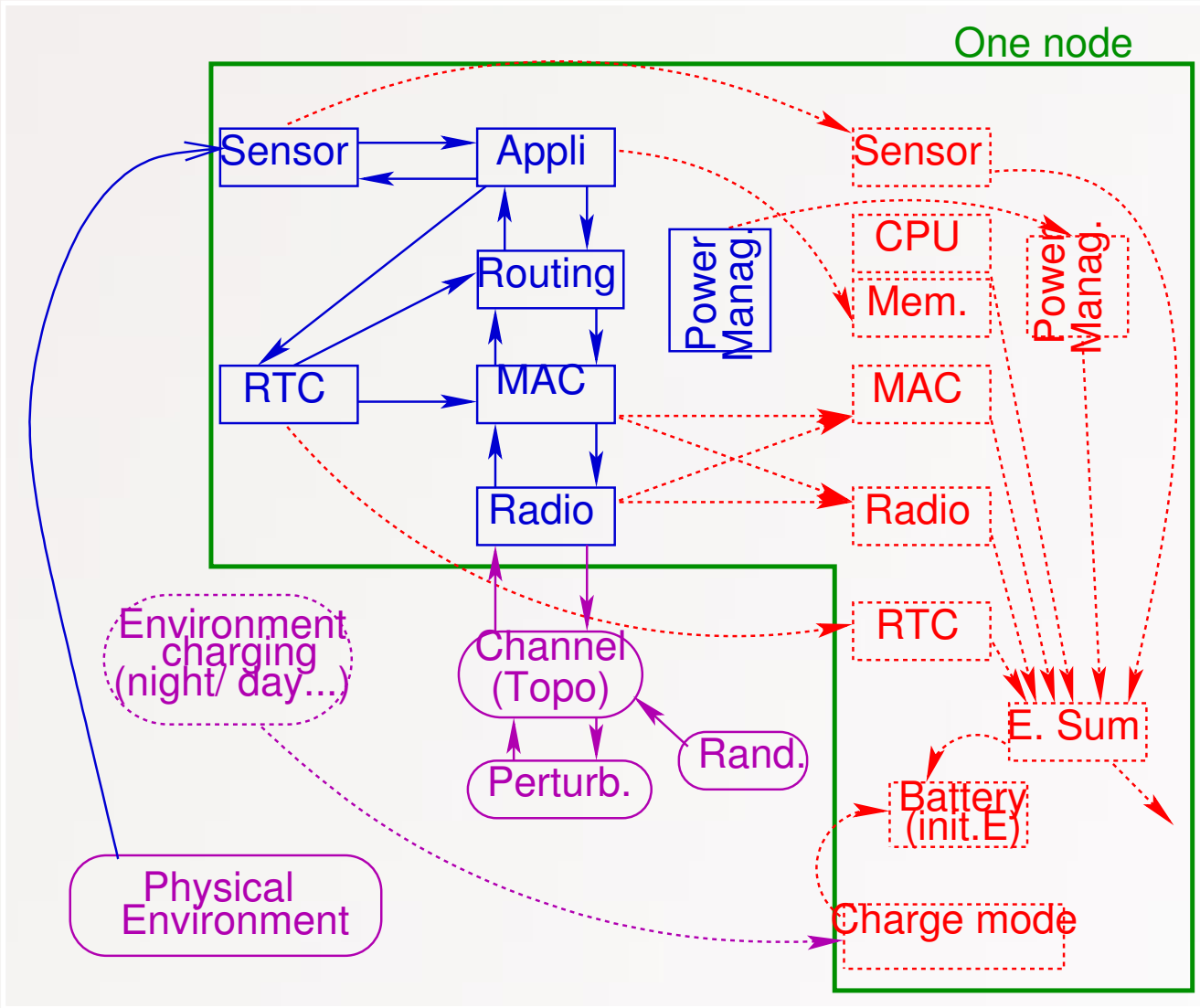

All these models are expressed in the same MoCC (synchronous parallelism)

Comments (1)

This virtual prototype (written in ReactiveML + Lurette, thanks to L. Mandel, P.Raymond, E. Jahier) is quite precise:

- It contains the "real" code (a ReactiveML re-implementation of the C protocols)
- The energy models are taken from the documentation of the providers (the radio, the CPU, ...)
- The model of the physical environment is given in some operational way (a generator of stimuli)
- The model of the radio channel is taken from the literature on networks (a precise one, with fading and shadowing, not the simple "disk" model)
- We simulate the asynchrony between the nodes

Comments (2)

Energy consumption is associated with "states" in the energy models of all the hardware pieces $\neq$ energy associated with abstract events like "*a message reaches the sink*"

Stimuli on the sensors are spatially and temporally correlated, hence more realistic than independent Poisson Laws on the sensors

The complete model is too complex to be analysed in full details, but some abstractions can be derived from this very precise model.

2 Model-Based Engineering and Virtual Prototyping

- General (Simplified) Picture
- Virtual Prototyping with Transactional Models
- Virtual Prototyping of Sensor Networks with Synchronous Languages and Tools
- On Abstraction and Faithfulness

Models are Necessarily Abstract (see J.-L. Borges)

...In that Empire, the craft of Cartography attained such Perfection that the Map of a Single province covered the space of an entire City, and the Map of the Empire itself an entire Province. In the course of Time, these Extensive maps were found somehow wanting, and so the College of Cartographers evolved a Map of the Empire that was of the same Scale as the Empire and that coincided with it point for point. Less attentive to the Study of Cartography, succeeding Generations came to judge a map of such Magnitude cumbersome, and, not without Irreverence, they abandoned it to the Rigours of sun and Rain. In the western Deserts, tattered Fragments of the Map are still to be found, Sheltering an occasional Beast or beggar; in the whole Nation, no other relic is left of the Discipline of Geography.

Abstraction vs Faithfulness

(see also: talk by O. Bezet)

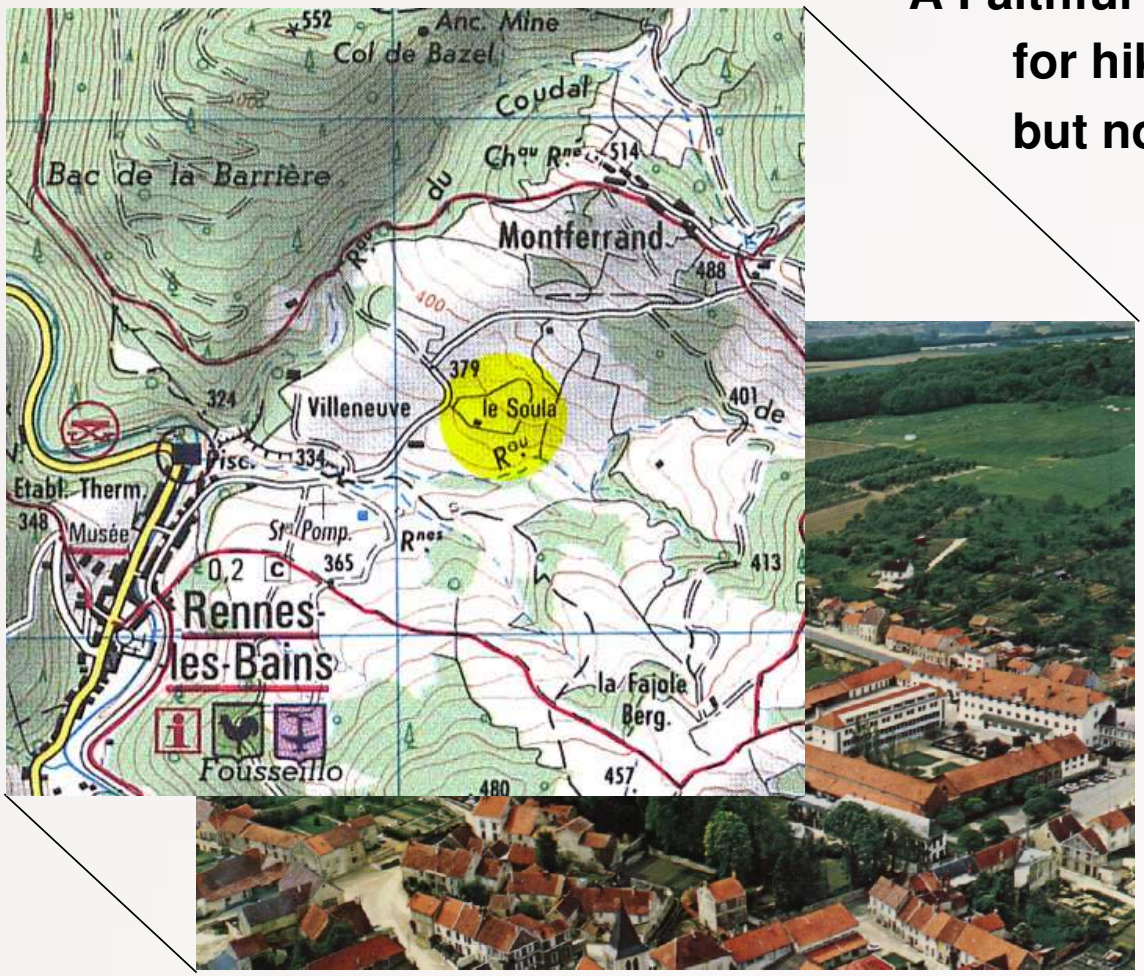

A Faithful model...

for hiking or riding

but not so good for driving

The real system

Abstraction vs Faithfulness

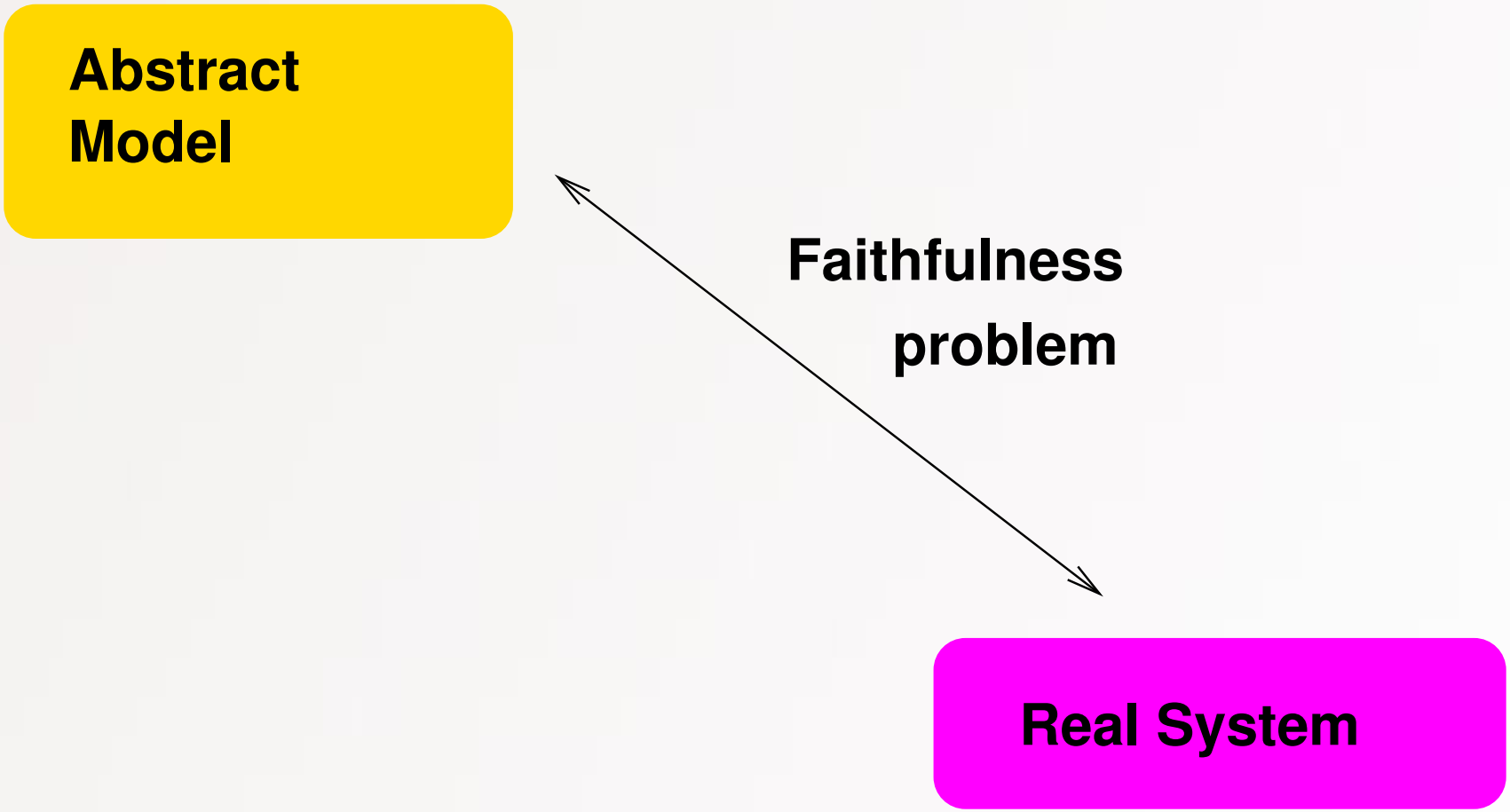

Abstraction vs Faithfulness

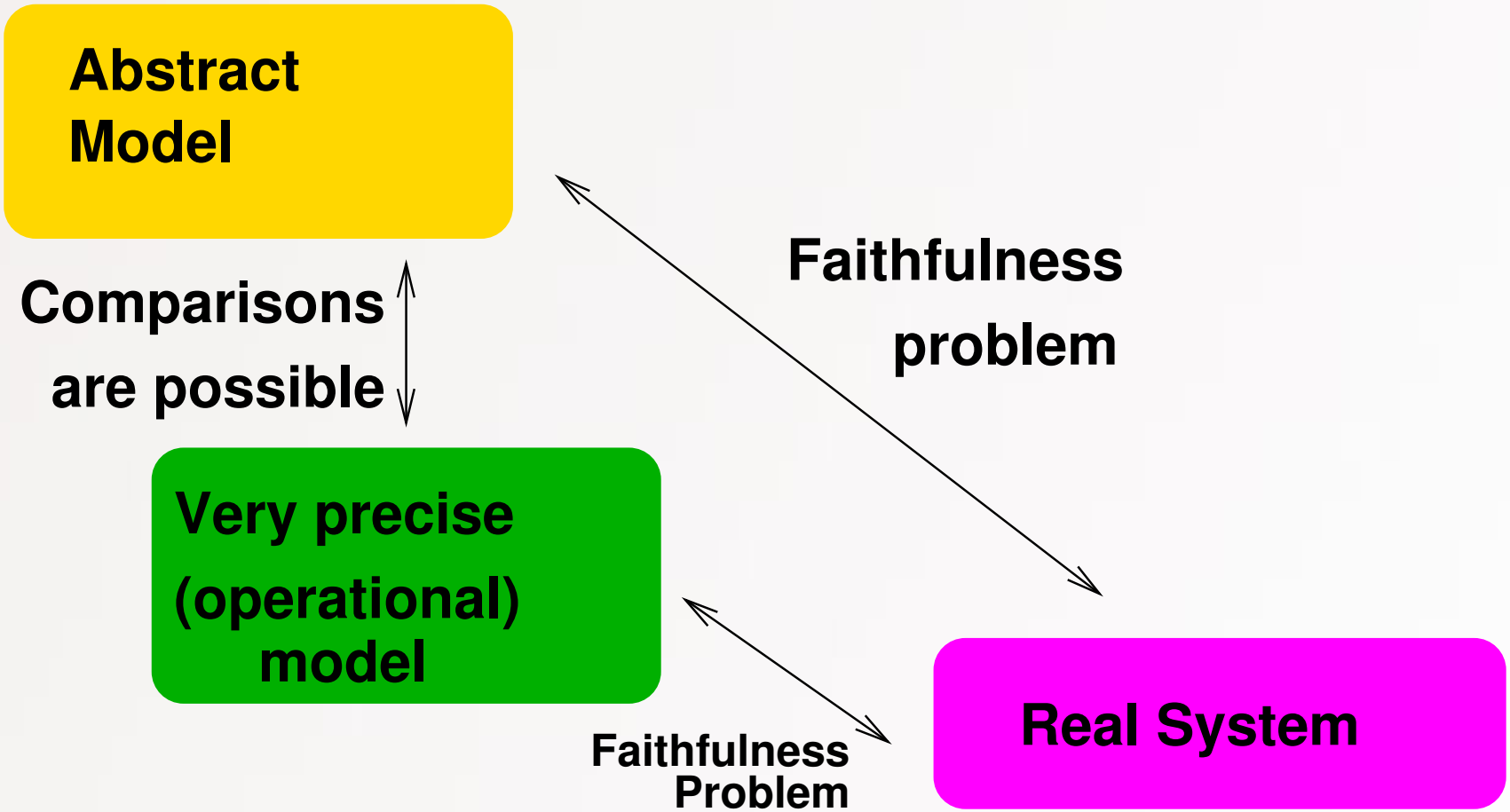

Modular Worst-Case Energy Consumed (SLAP'07)

- The complete model of a sensor network is far too complex to be analysed as a whole. Hence we need abstractions, and they should be modular.
- A notion of precision in energy models, captured by an *order*: $M_1 \leq M_2$. The evaluation of this order for two given energy models should be made automatic (with approximate verification methods).
- A pre-congruence property, for all composition operators op used in the model: $M_1 \leq M_2 \implies \forall M.\, \mathrm{op}(M, M_1) \leq \mathrm{op}(M, M_2)$. This property has to be proved by hand, once and for all. Highly depends on the separation between function and energy.

The Lego Principle

Globally: A model *M*

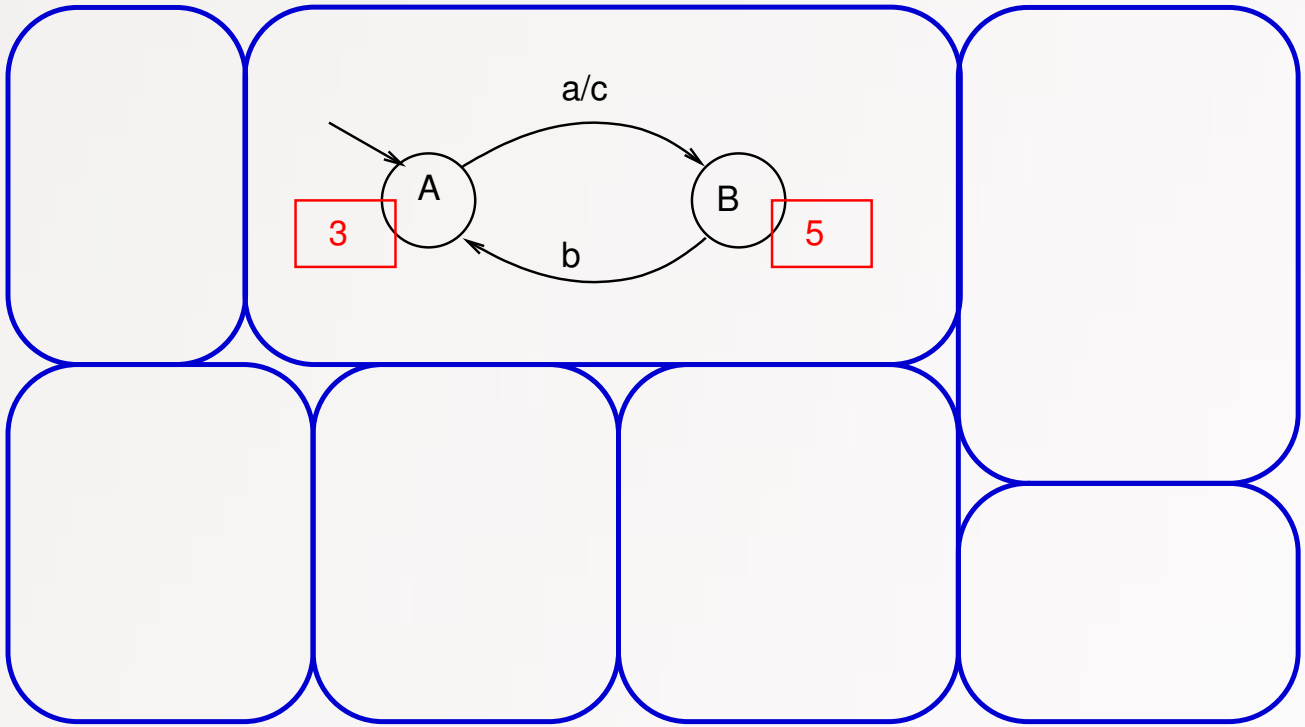

The Lego Principle

...

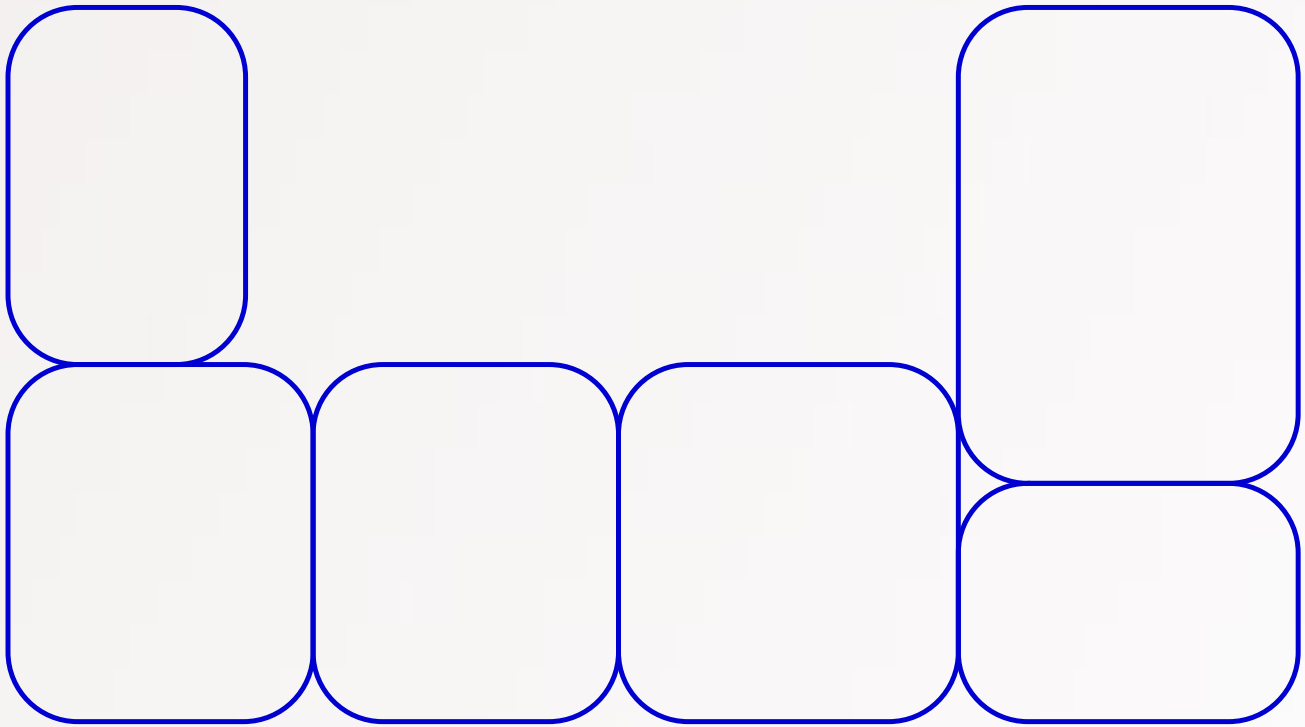

The Lego Principle

Globally: A model M' more precise then M

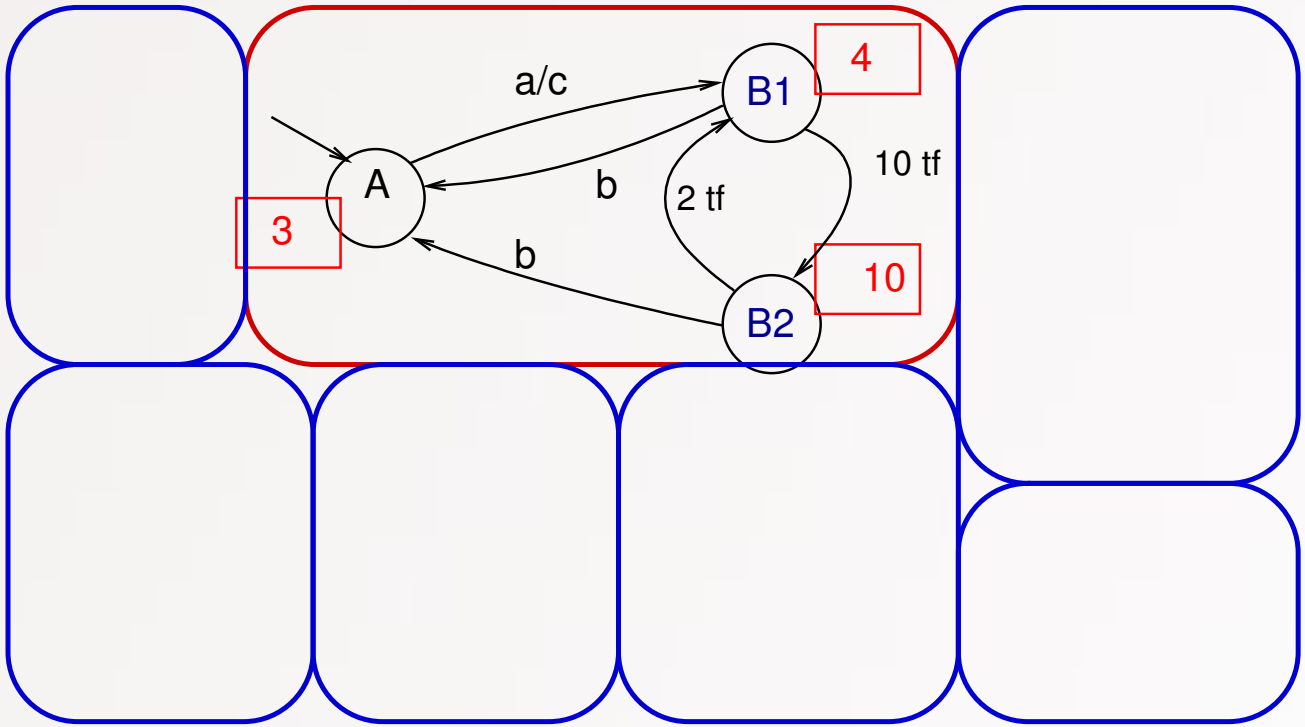

1 What you can (already) do with the synchronous language Lustre (Summary)

2 Model-Based Engineering and Virtual Prototyping

3 42, a Model of Components
- Context, Motivations and Related Work
- 42 in a Nutshell

4 Towards MBE and VP *à la* 42

5 Provocative Comments

3 42, a Model of Components
- Context, Motivations and Related Work
- 42 in a Nutshell

42, Model-Based X, Virtual Prototyping...

(see also: talk by T. Bouhadiba)

42 is a tool for reasoning on what MBX and VP mean for embedded systems, looking at several applications domains and domain-specific methods:

- Embedded Control (Simulink, synchronous formalisms)
- Systems-on-a-chip (Transaction-Level Modeling, SystemC)
- Sensor Networks (VP with NS, opnet, dedicated simulators, lanugaes from the synchronous family)

42 aims at enforcing the FAMAPASAP Principle

The *"Forget As Much As Possible As Soon As Possible"* principle:

- Closing the box as soon as possible
- Identifying the component data and control ports that have to be exposed
- Giving a precise specification of the components with *protocols*

An Example Embedded System with Components

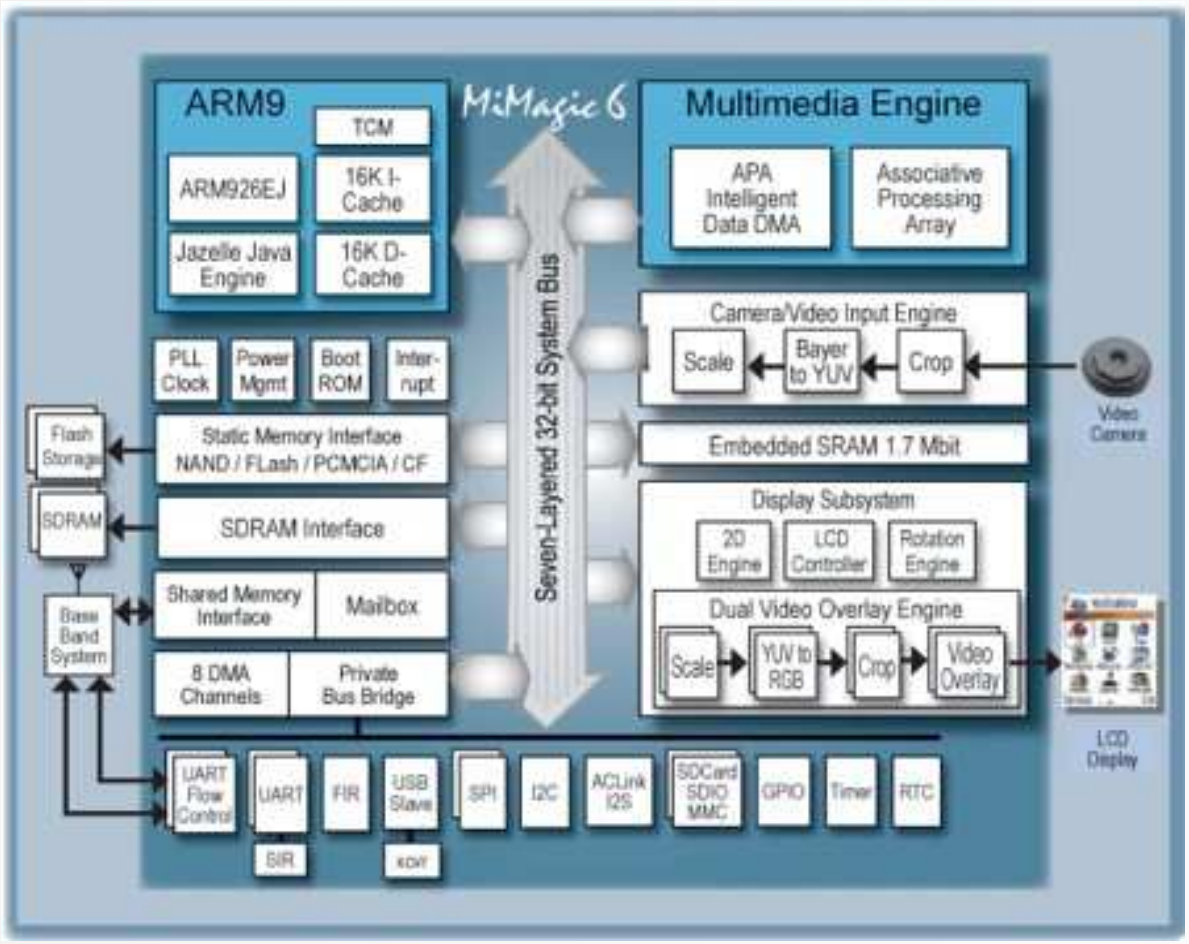

An Example Embedded System with Components

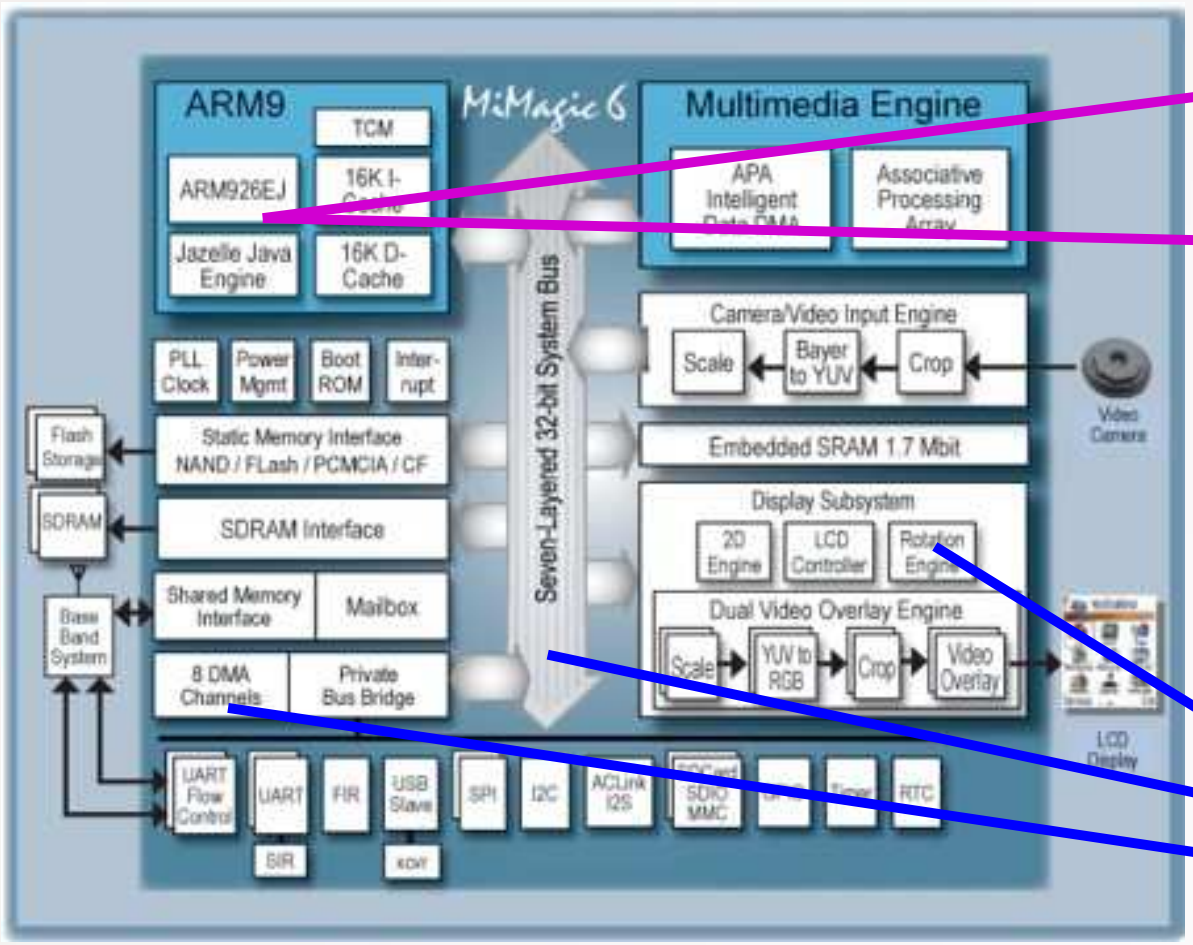

On a processor:

A real–time OS + several processes

Each process can be programmed in a component–based framework

Hardware IP's (components)

Main Sources of Inspiration (1)

ptolemy.eecs.berkeley.edu

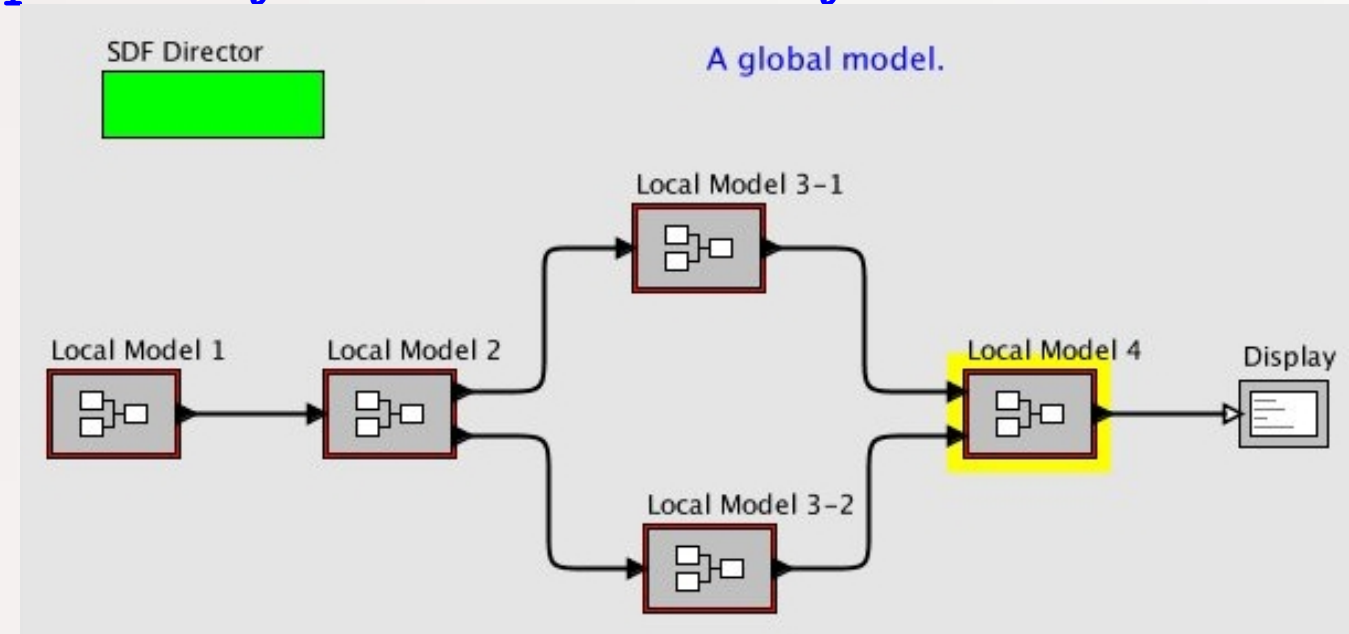

- Components are actors, assembled with wires
- A director defines how they behave together.
  A director implements a MoC.
- Hierarchic framework
- $\exists$ a lot of available MoCs

Main Sources of Inspiration (2)

Modeling heterogeneous systems with Synchronous Lgs

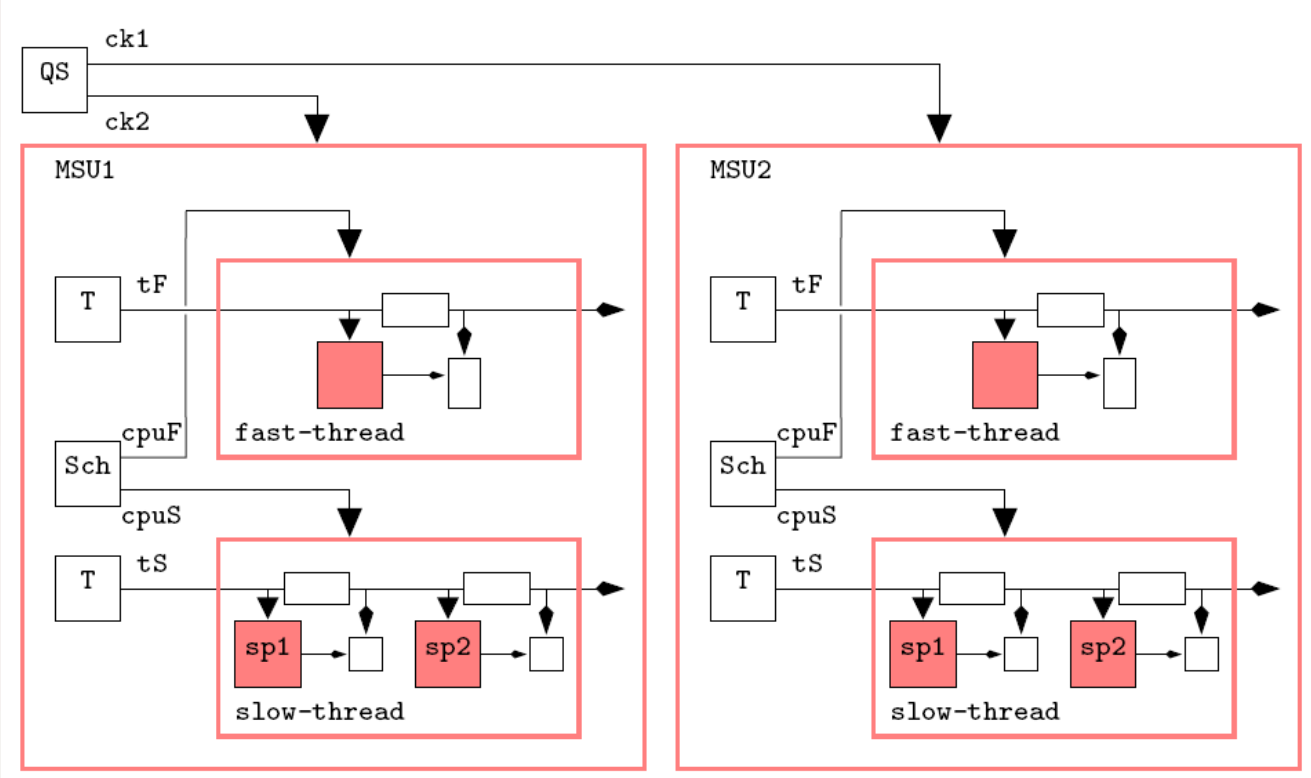

Lustre model : formal semantics + executability
(All MoCs are *encoded* into the synchronous one, using additional signals)

A Lustre program that models 2 processors, each of them running a scheduler and 2 threads.

"Virtual Execution of AADL Models via a Translation into Synchronous Programs", EMSOFT'07

3 42, a Model of Components

- Context, Motivations and Related Work
- 42 in a Nutshell

42 in a Nutshell: a Basic Component

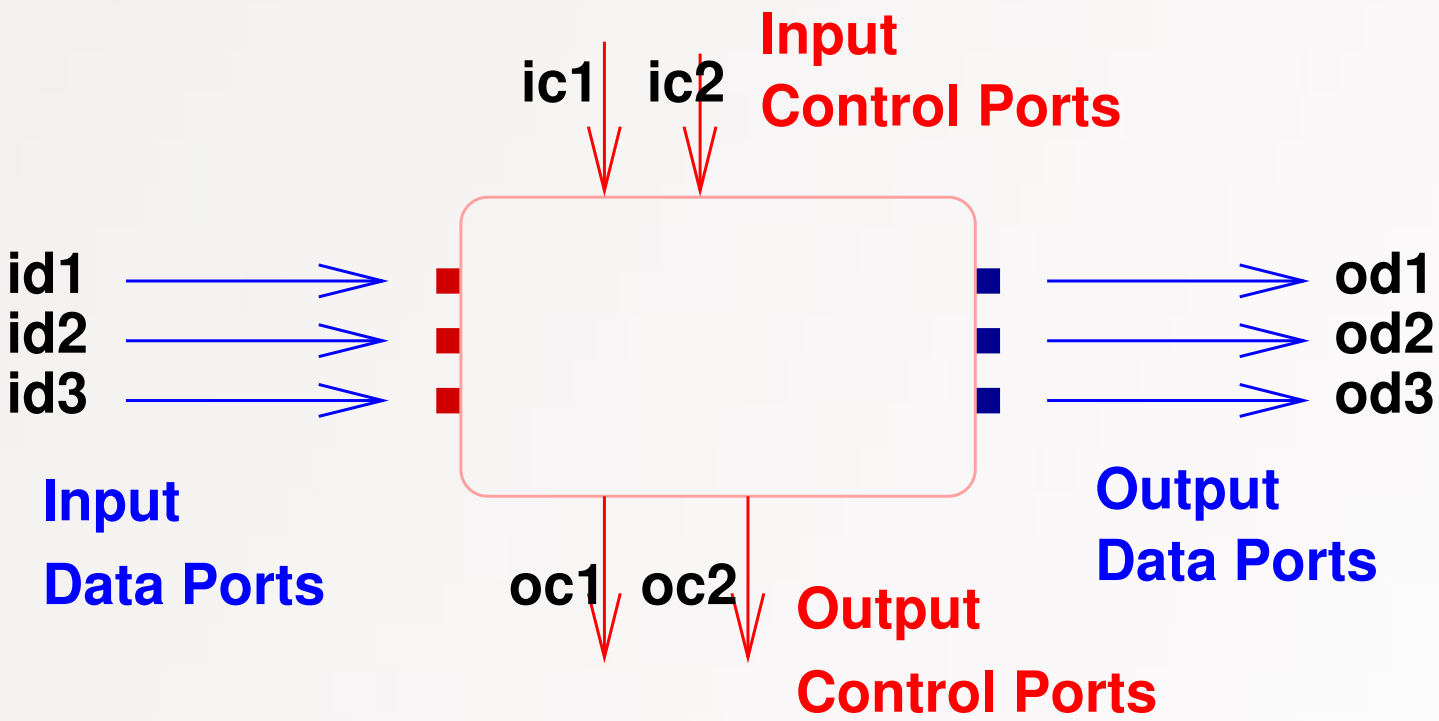

42 in a Nutshell: a Basic Component

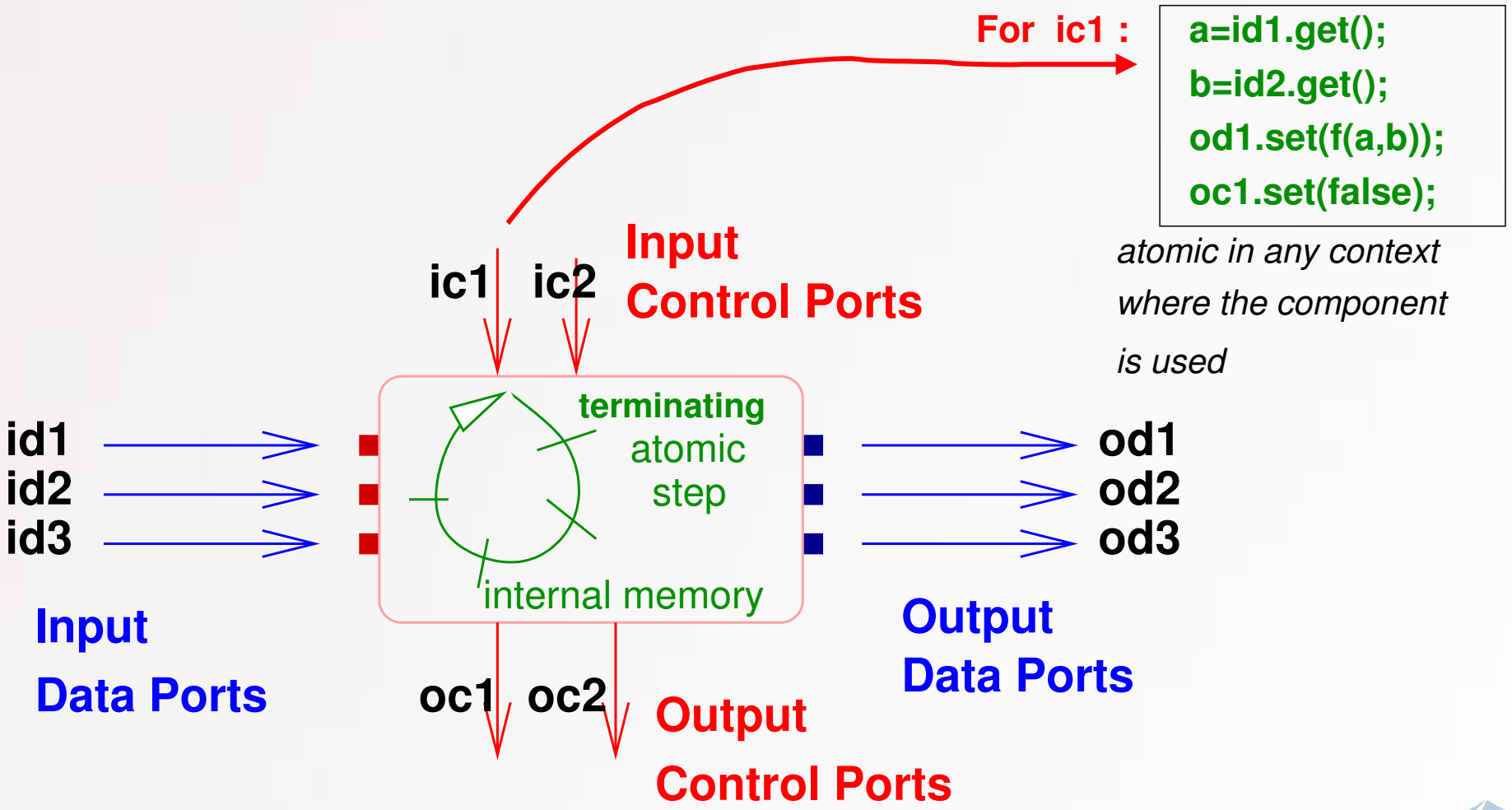

42 in a Nutshell: Assembling Components

42 in a Nutshell: Assembling Components

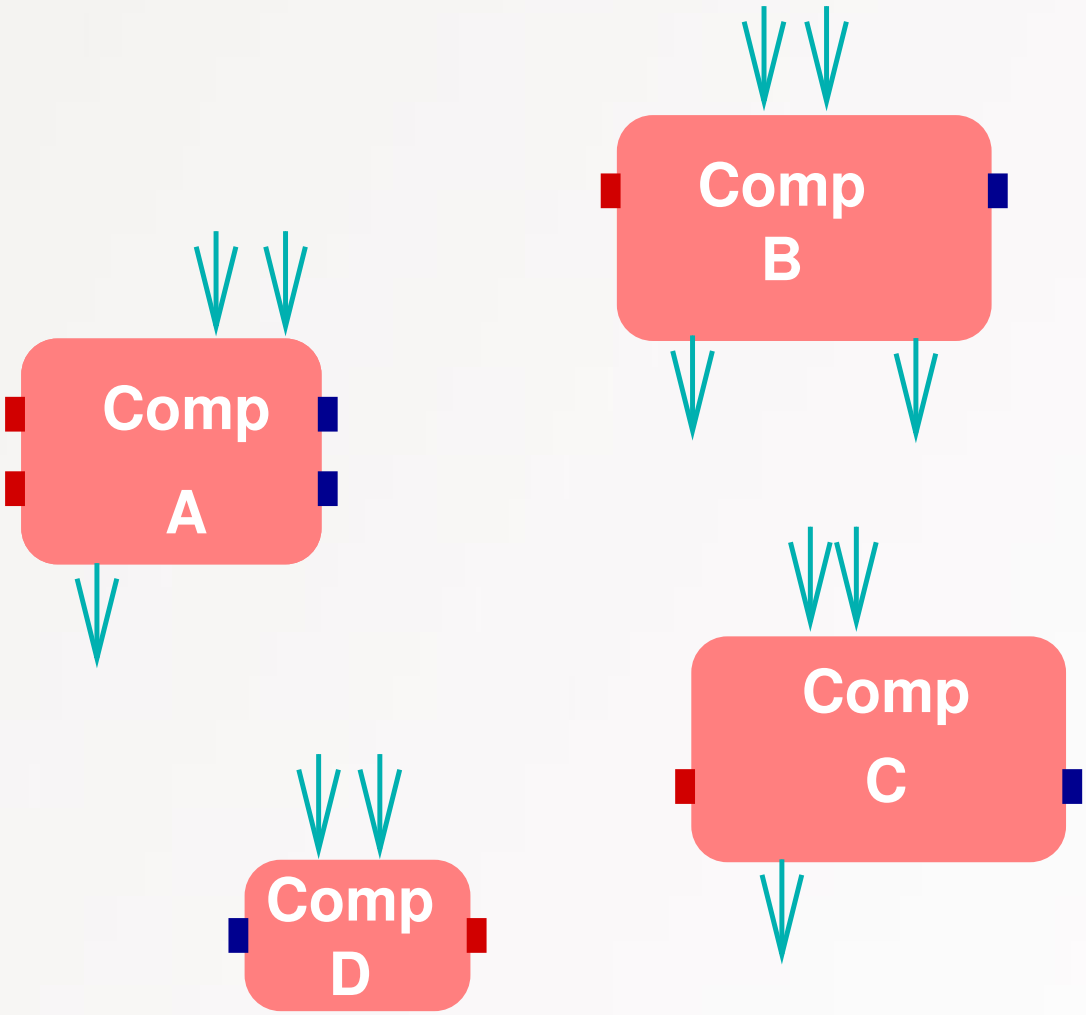

42 in a Nutshell: Assembling Components

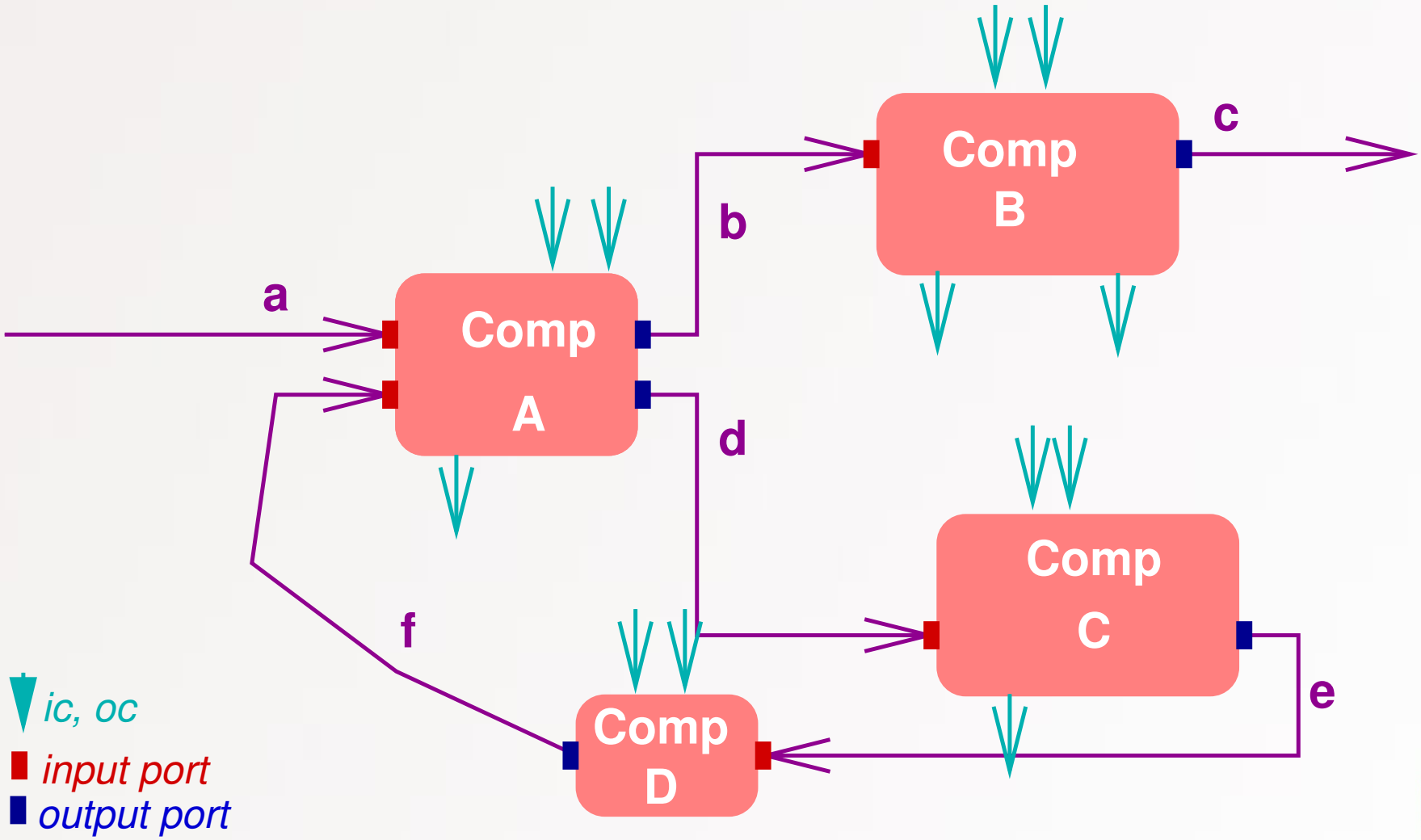

42 in a Nutshell: Assembling Components

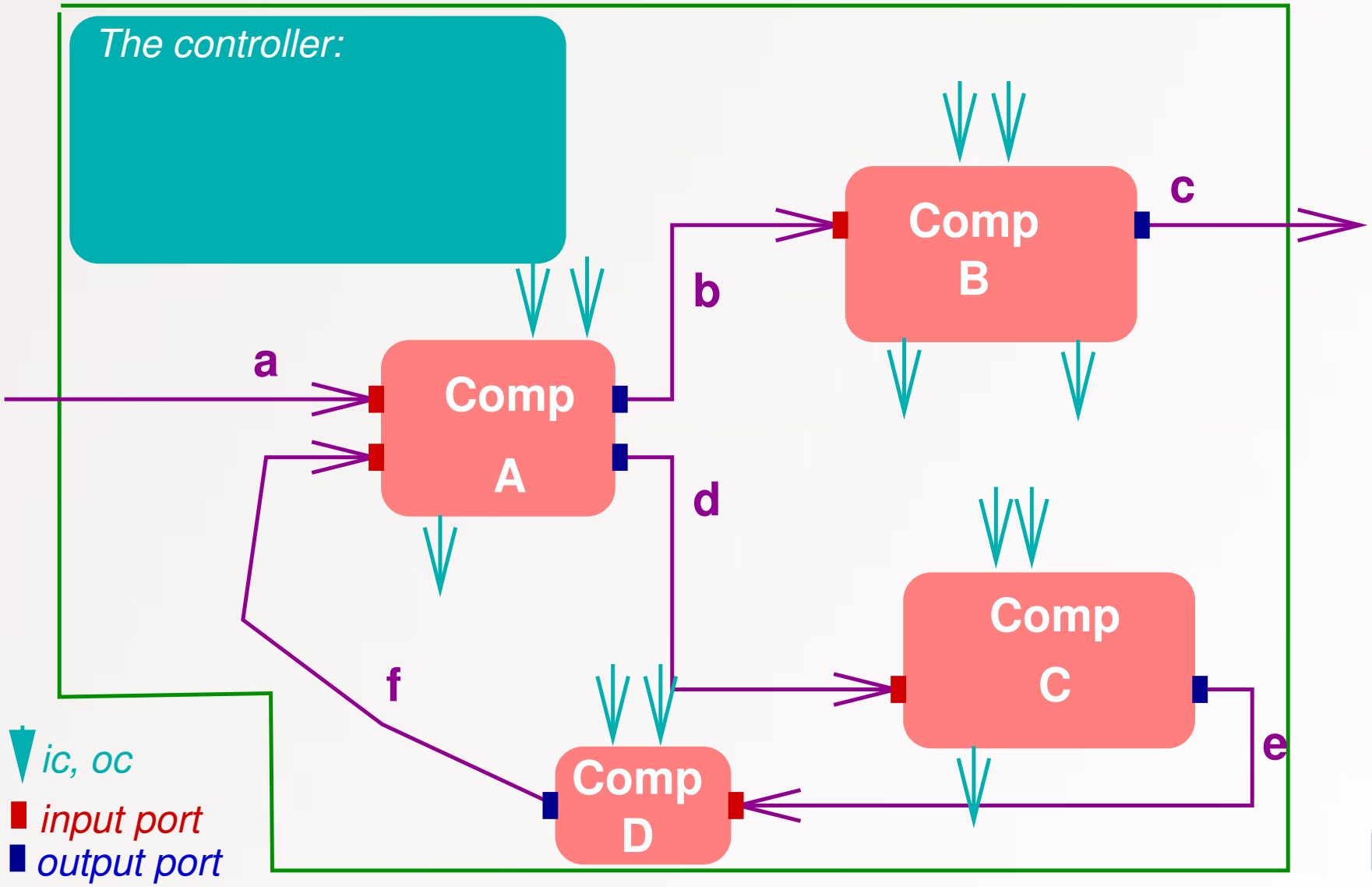

42 in a Nutshell: Assembling Components

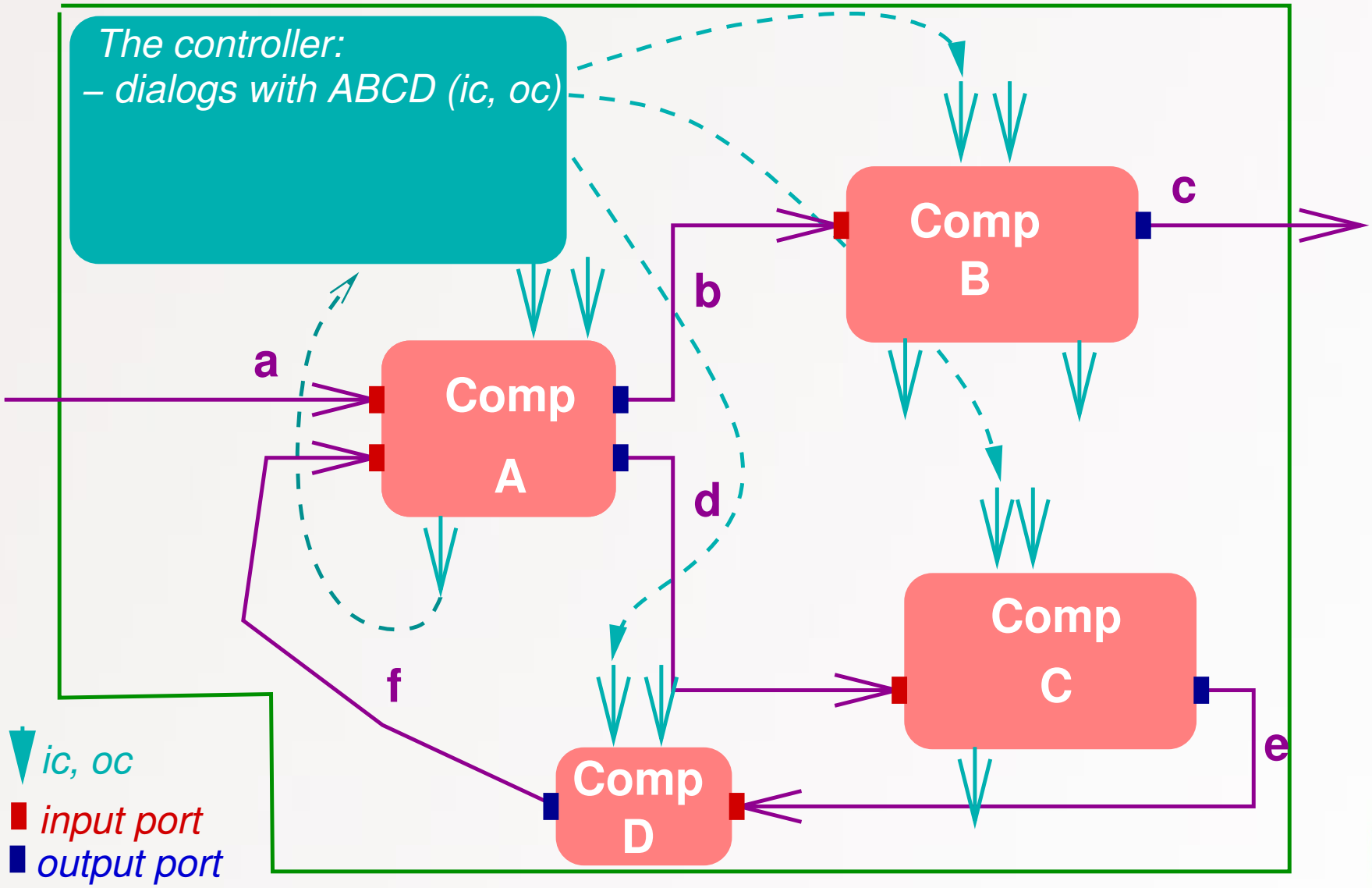

42 in a Nutshell: Assembling Components

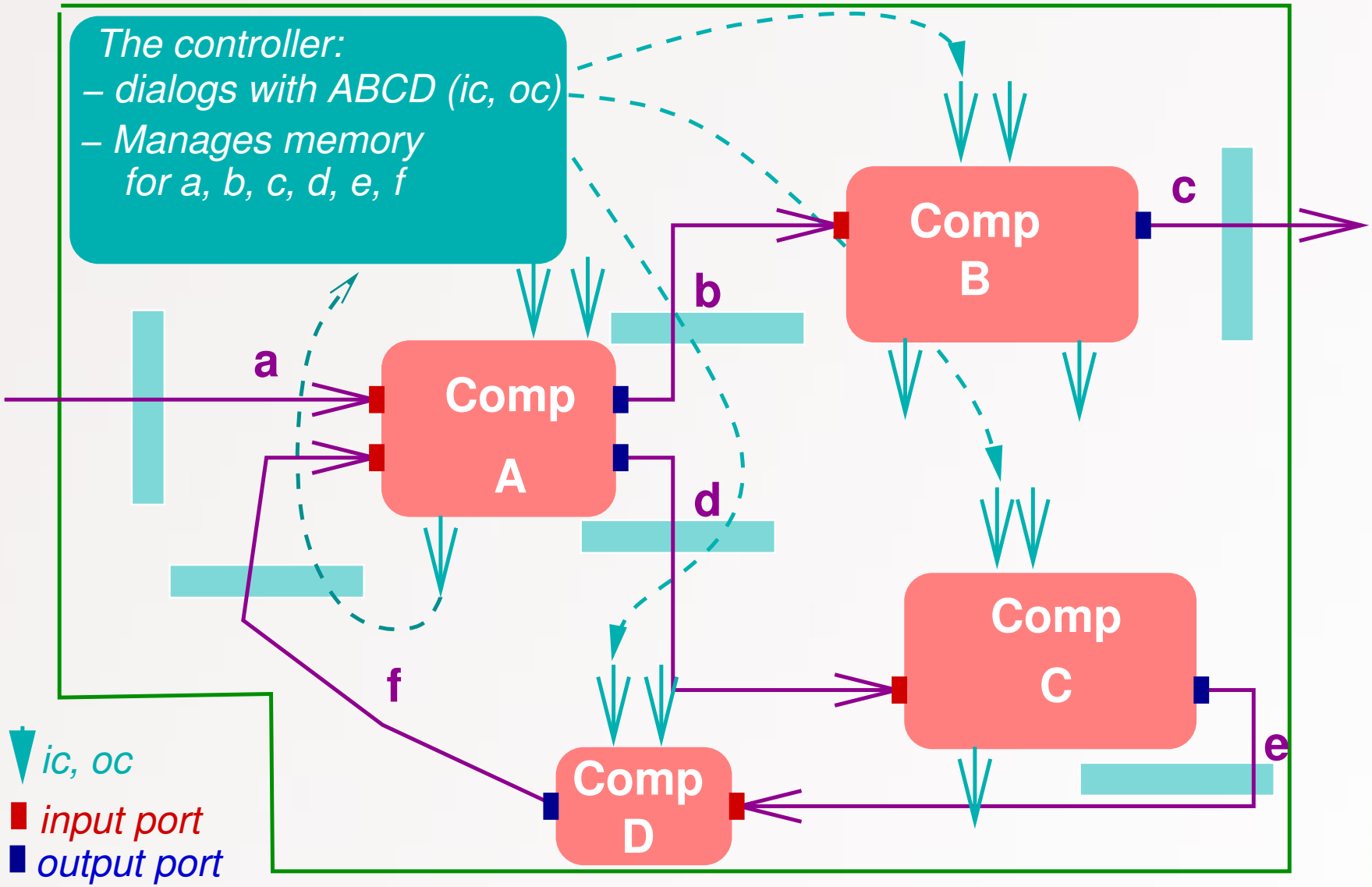

42 in a Nutshell: Assembling Components

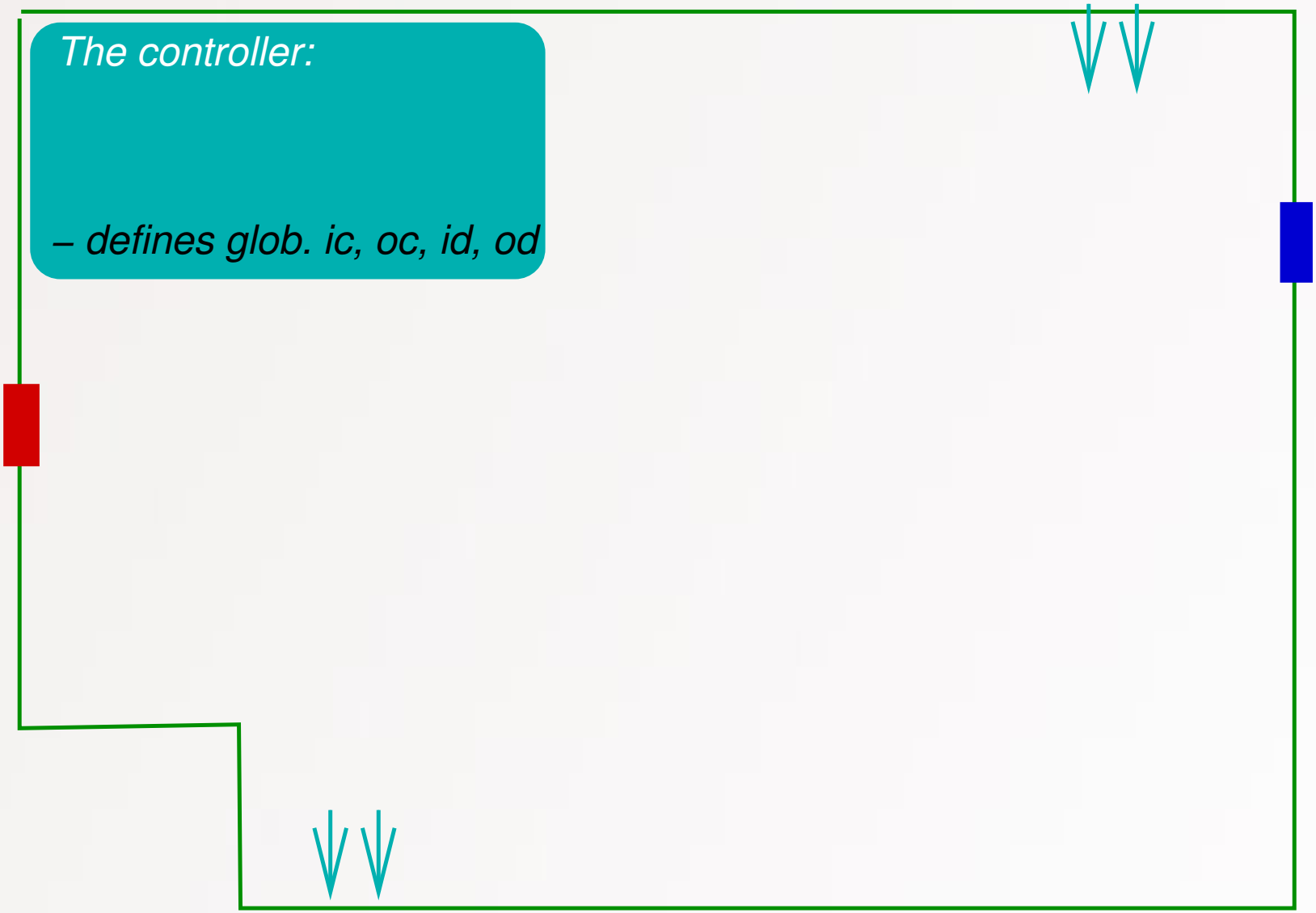

42 in a Nutshell: the Controller

(in some imperative style language, could also be constraint-based, ...)

```
Controller is
var m :  bool = true ;
for X do :  {
  m_a, m_b, m_c:  FIFO(1,int);
  m_d, m_e, m_f:  FIFO(4,int);
  if (m) {
    m_a.put ; // reads i1
    m_a.get ; D.z ; m_f.put ; m_f.get ;
    A.u; m_b.put; m_d.put;
    m_b.get; B.v; m = m or p ;
    m_c.put ; m_c.get ;//defines o1
    m_d.get ; C.w ; m_e.put ;
    C.y ; m_e.put ;
    m_e.get ; D.k ; m_e.get ;
    D.k ; m = !  m ;
  } else { ...  }
  yy = true ;
}
```

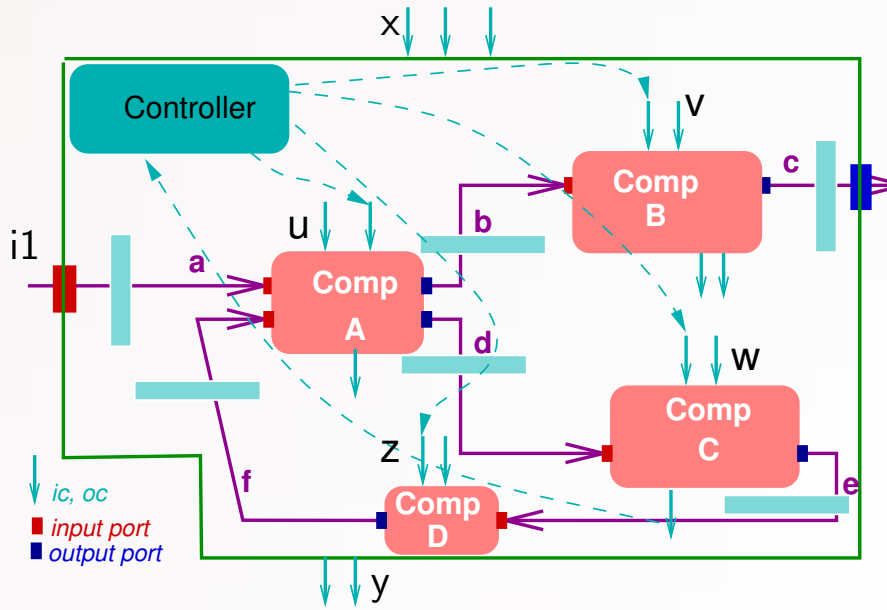

Component Protocols and Checking Assemblages

related work: OO protocols, circuit sequential "don't cares", circular assume/guarantee rules, Signal clock+data specifications, ...

Component Protocols and Checking Assemblages

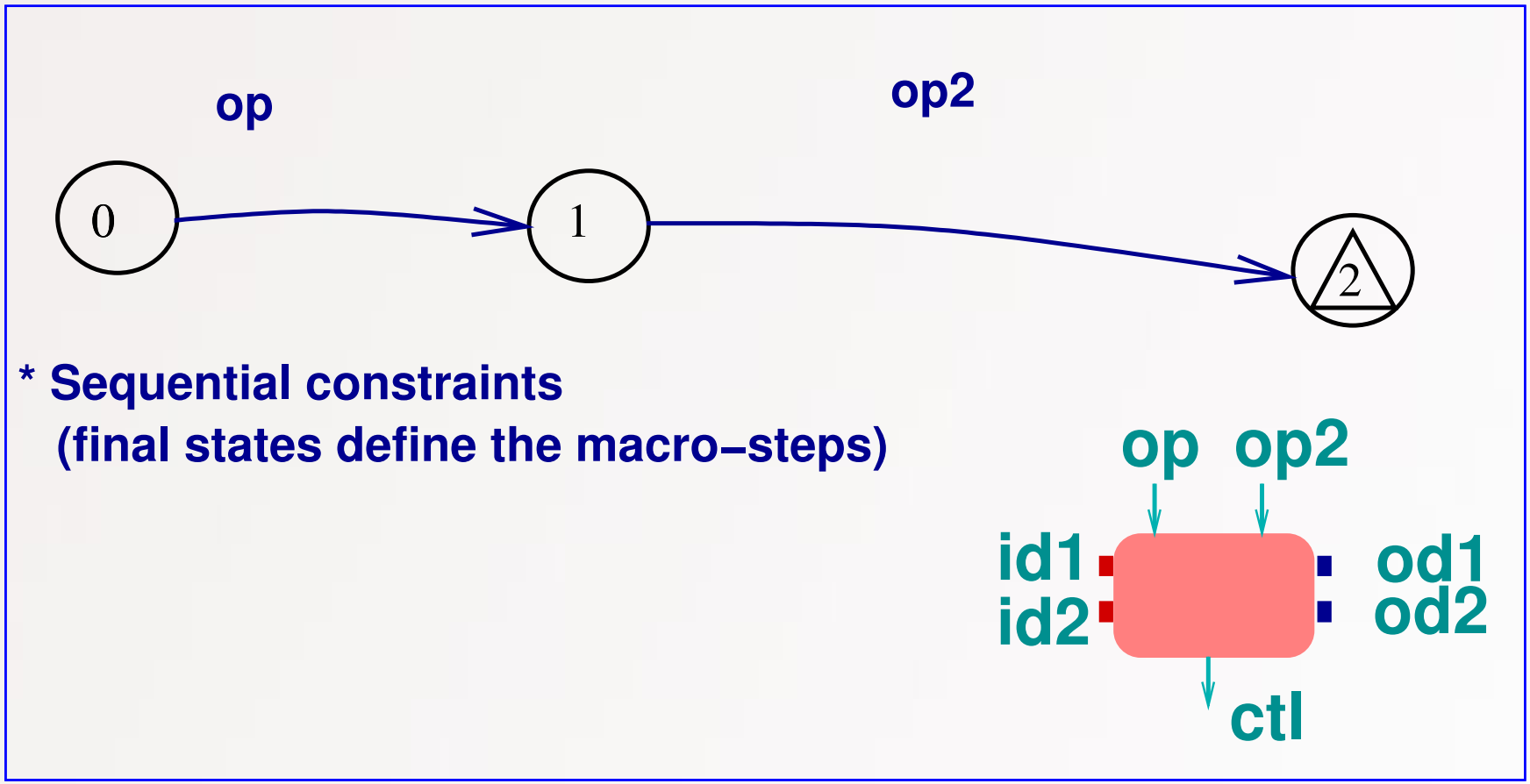

related work: OO protocols, circuit sequential "don't cares", circular assume/guarantee rules, Signal clock+data specifications, ...

Component Protocols and Checking Assemblages

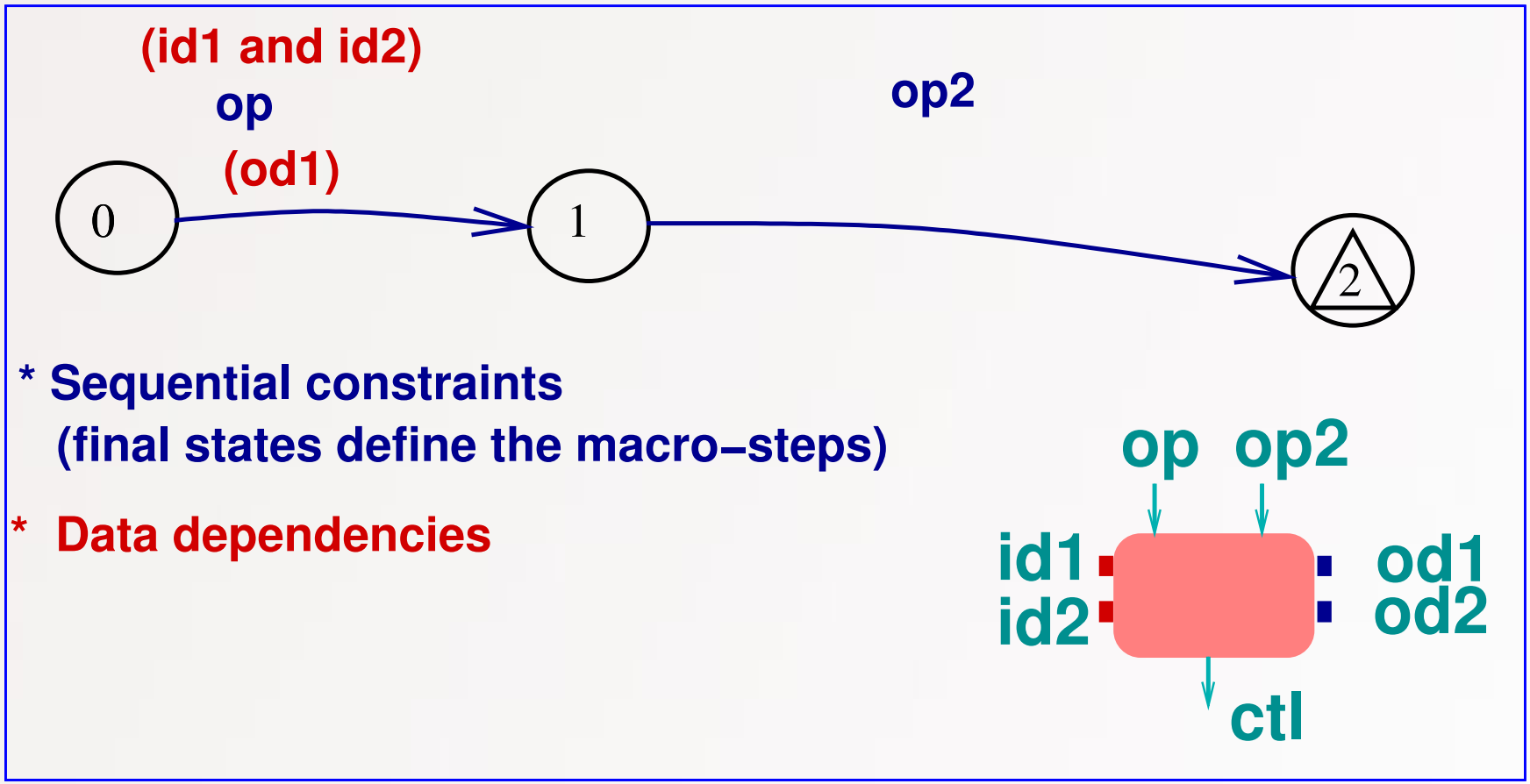

related work: OO protocols, circuit sequential "don't cares", circular assume/guarantee rules, Signal clock+data specifications, ...

Component Protocols and Checking Assemblages

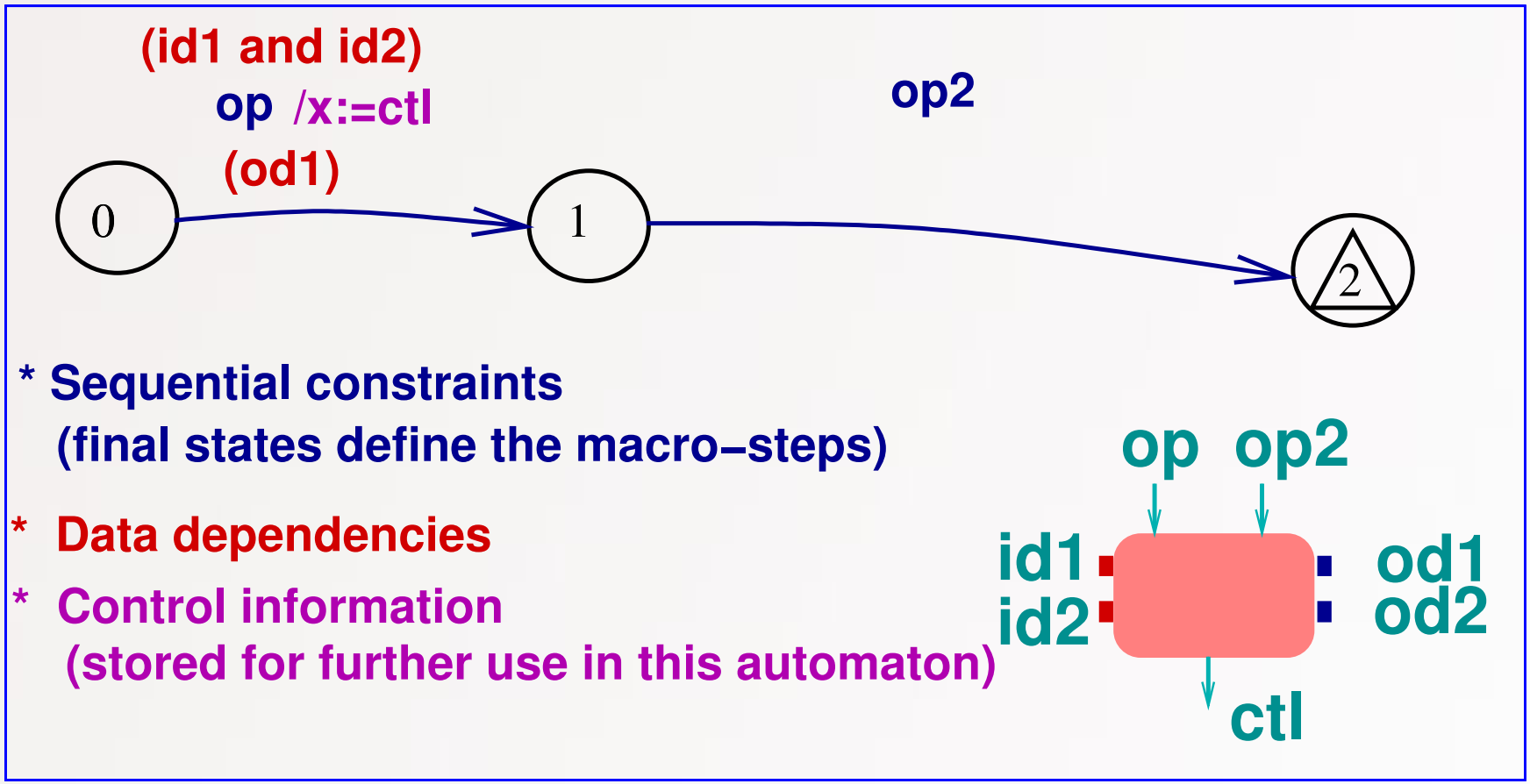

related work: OO protocols, circuit sequential "don't cares", circular assume/guarantee rules, Signal clock+data specifications, ...

Component Protocols and Checking Assemblages

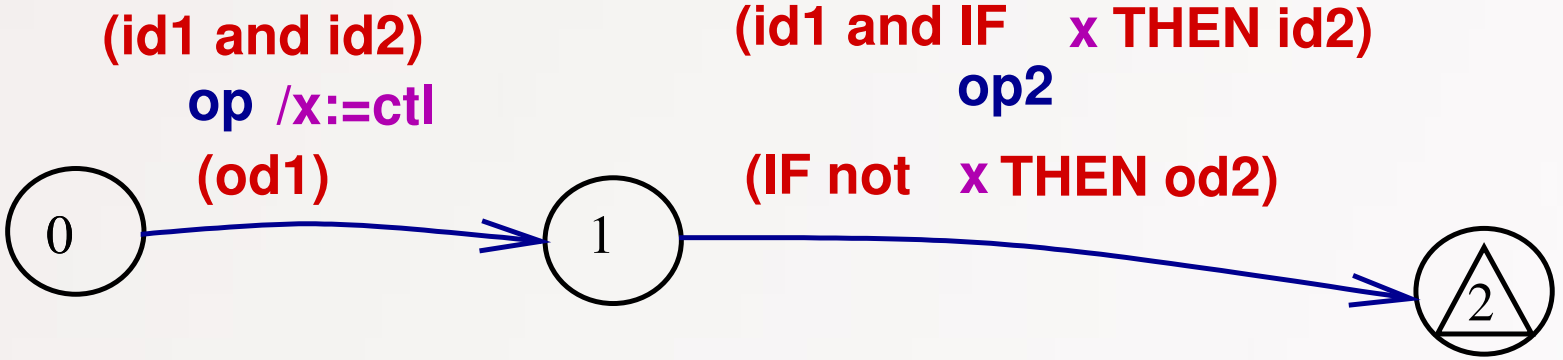

* **Sequential constraints**
  (final states define the macro–steps)
* **Data dependencies**
* **Control information**
  (stored for further use in this automaton)
* **Conditional data expressions**

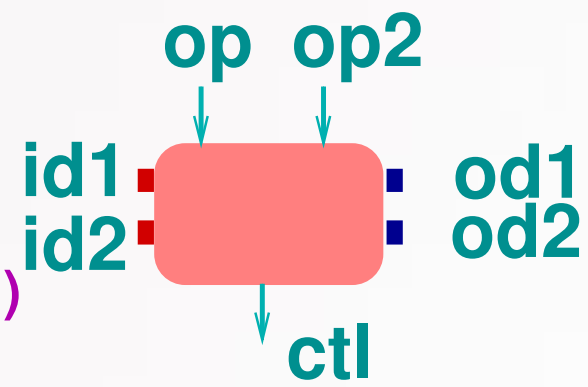

related work: OO protocols, circuit sequential "don't cares", circular assume/guarantee rules, Signal clock+data specifications, ...

1 What you can (already) do with the synchronous language Lustre (Summary)

2 Model-Based Engineering and Virtual Prototyping

3 42, a Model of Components

4 Towards MBE and VP *à la* 42

5 Provocative Comments

A Problem

A team looking at:
An avionics execution platform (buses, several CPUs, some of them running RTOS, sensors, actuators)
and implementation problems (taking C code for individual tasks)

Others teams looking at:
SCADE or Lustre or SAO (CAS) descriptions of individual tasks, eventually compiled into C

A Problem

A team looking at:
An avionics execution platform (buses, several CPUs, some of them running RTOS, sensors, actuators)
and implementation problems (taking C code for individual tasks)

Others teams looking at:
SCADE or Lustre or SAO (CAS) descriptions of individual tasks, eventually compiled into C

---

the system-level view,
need for VP (at least) and glue generation

Provider of SW components, to be used in some (implicit) intended context of use

Current Practise

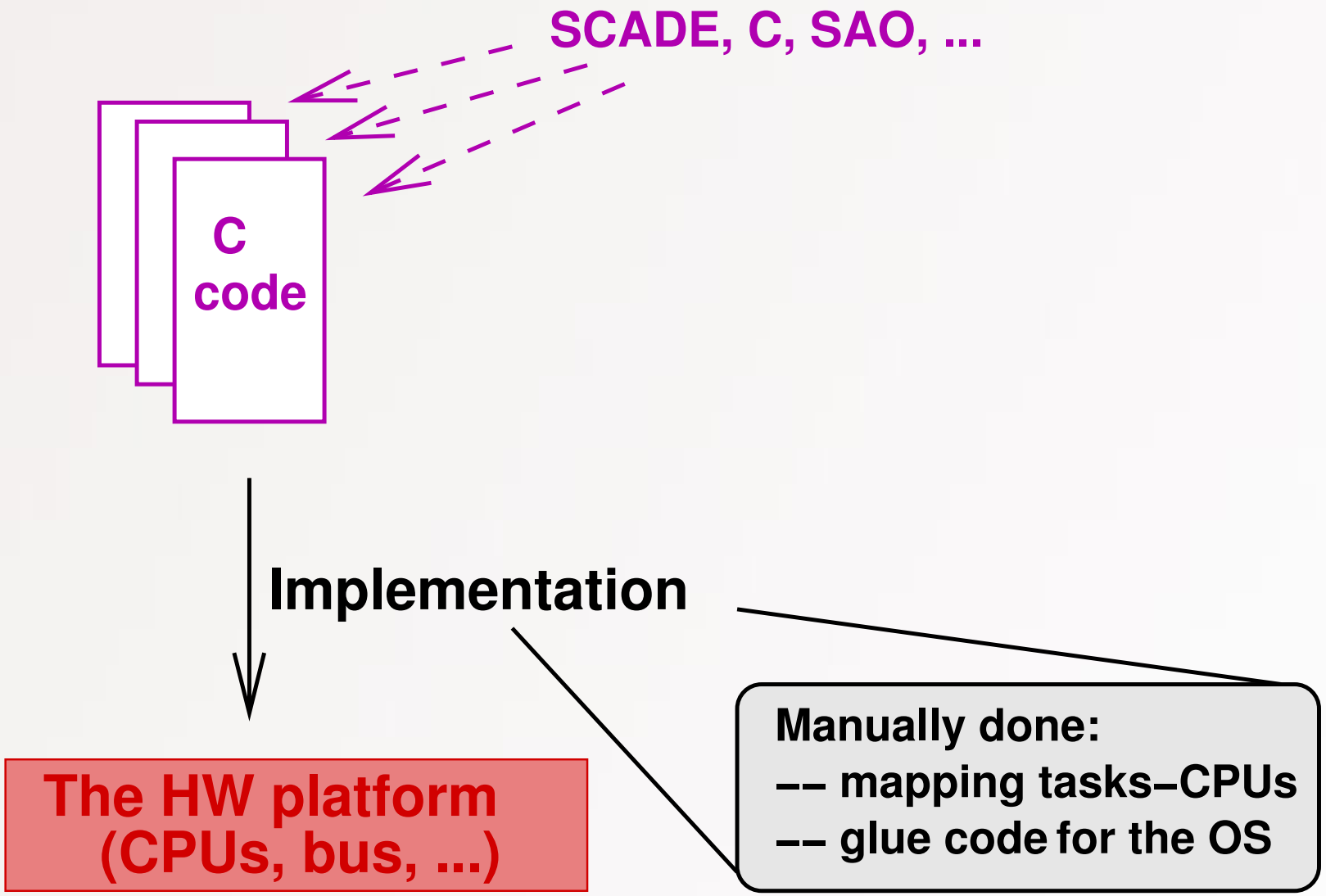

42 as the system-level description language

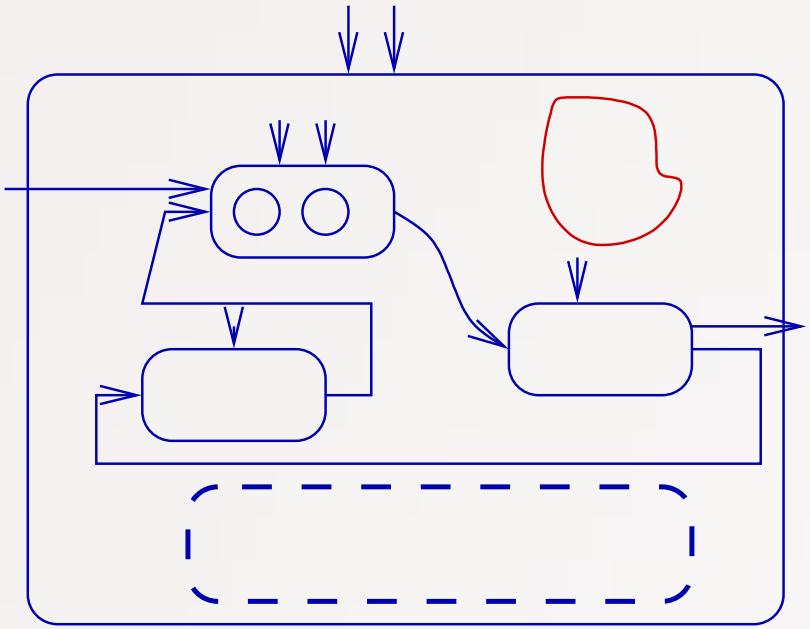

A 42 system–level description.

The HW platform (CPUs, bus, ...)

42 as the system-level description language

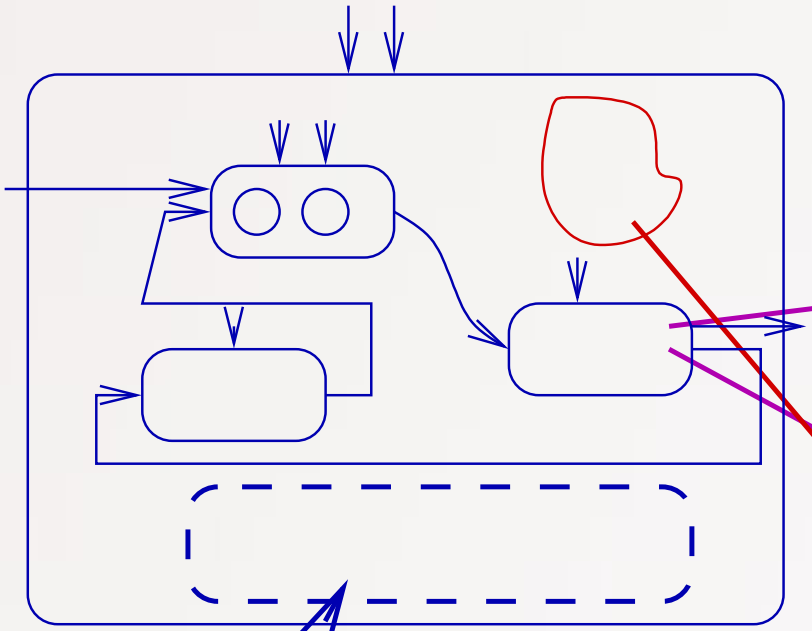

A 42 system–level description.

42ized C code

SCADE, C, SAO,...

TLM–like modeling task

A 42 MoC expressing: a SW component runs on a HW component

The HW platform (CPUs, bus, ...)

42 as the system-level description language

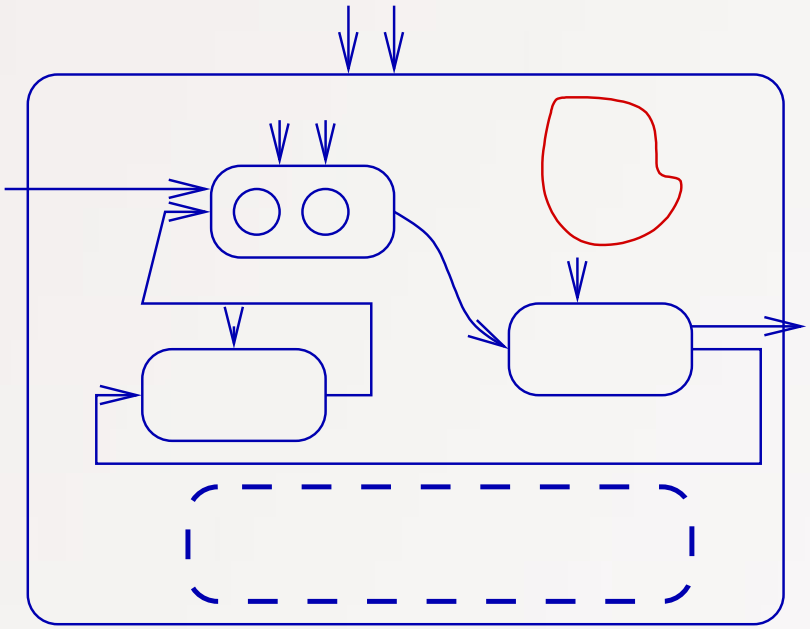

A 42 system–level description.

42 as the system-level description language

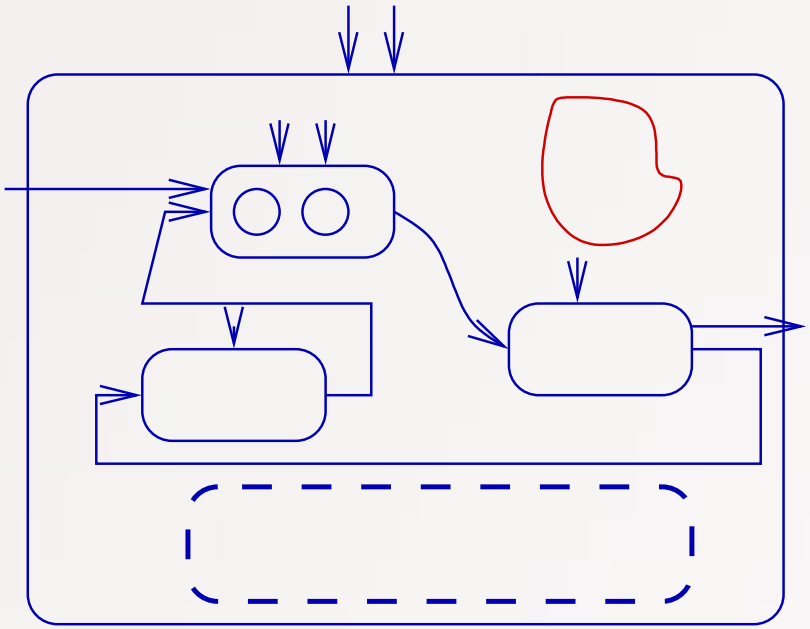

A 42 system–level description.

Virtual Prototype Execution

42 as the system-level description language

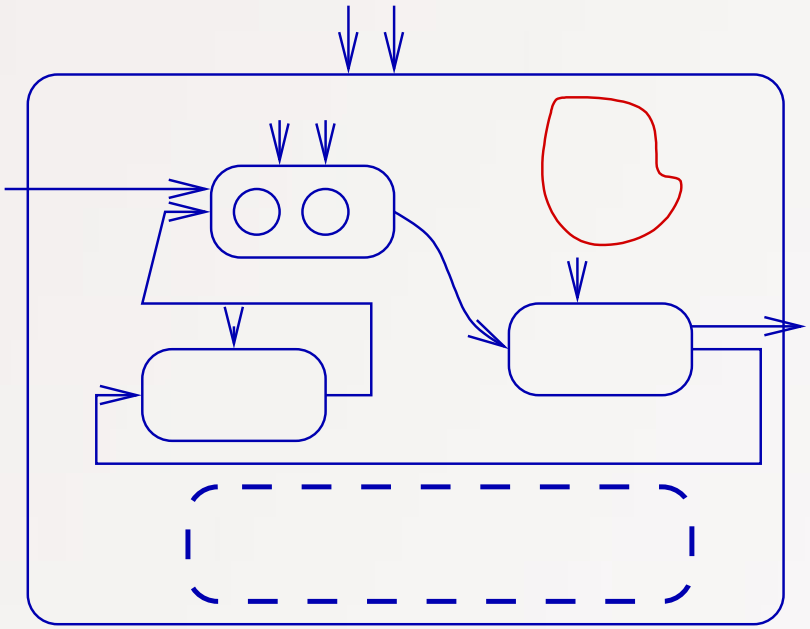

A 42 system–level description.

Automatic glue–code generation

The HW platform (CPUs, bus, ...)

To be Done...

- 42-ization of the TLM principles
  (mimicking SystemC behaviour, or not)
- Invent the 42 MoC that means:
  a SW component *runs* on a HW component
- Choose a realistic execution platform and model it
- Understand the manual implementation method (relies on *patterns* for a quite restrictive class of execution platforms)
- Mimick the manual method with some automatic generation method
- Apply this to a case-study (with a SystemC model of the execution platform because we don't have the real HW!)

1 What you can (already) do with the synchronous language Lustre (Summary)

2 Model-Based Engineering and Virtual Prototyping

3 42, a Model of Components

4 Towards MBE and VP *à la* 42

5 Provocative Comments

Provocative Comment (1)

Forget about non executable models

Choice is between:

Start from executable models, then abstract them (possibly turning them into non-deterministic models) and formalize their MoC *(Simulink, SystemC, opnet, synchronous languages used as modeling languages, ...)*

vs

Define high-level non executable (and semantically loose) models and then try to "animate" them (defining the semantics as a side-effect) *(UML, AADL, SysML, ...)*

Provocative Comment (2)

Making everything automatic: no hope!

A model of the application SW +
A model of the execution platform (HW+OS)
$\Longrightarrow$ magic $\Longrightarrow$
An implementation, including a mapping of the SW onto the HW

Provocative Comment (2)

Making everything automatic: no hope!

A model of the application SW +
A model of the execution platform (HW+OS)
$\Longrightarrow$ magic $\Longrightarrow$
An implementation, including a mapping of the SW onto the HW

Instead: Design an abstract model of a class of execution platforms and use it for:
— VP together with the SW part
— Dedicated implementation generation algorithms

Provocative Comment (3)

The main problem is in MoCCs, not languages or

The language semantic problem is the easy part

We don't really need more languages, but we need to understand the MoCCs behind the existing ones.
We need MoCCs for system-level-descriptions (HW, SW, OS, physical environments, ...)