Standardization

AUTOSAR – ECU Software Architecture

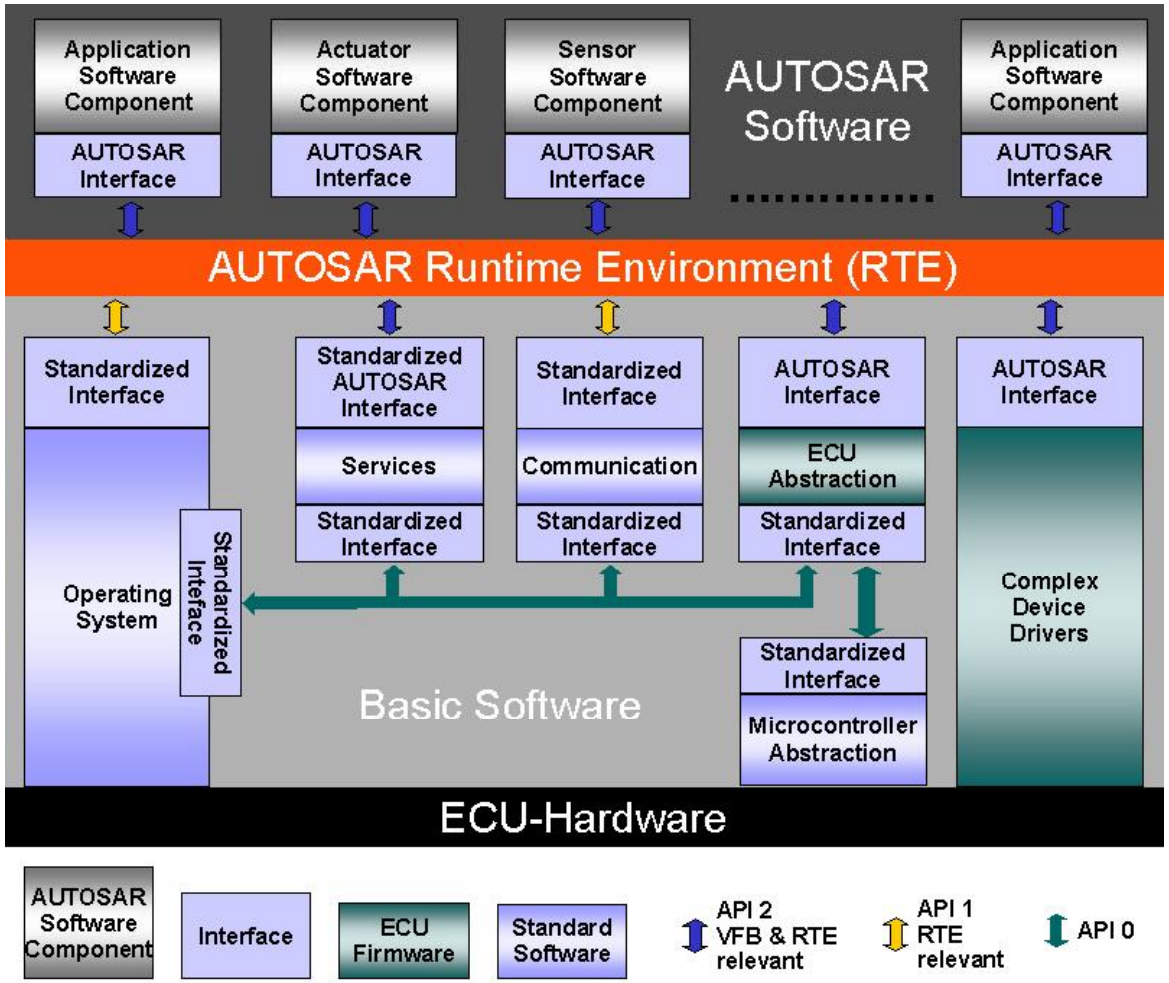

Automotive Open System Architecture (AUTOSAR):

- Standardized, openly disclosed interfaces
- HW independent SW layer
- Transferability of functions
- Redundancy activation

AUTOSAR RTE:
by specifying interfaces and their communication mechanisms, the applications are decoupled from the underlying HW and Basic SW, enabling the realization of Standard Library Functions.

16 Thursday, 24 February 2005

© BMW Car IT GmbH

source: www.autosar.org

AUTOSAR - First Experiences.

Model based development under AUTOSAR.

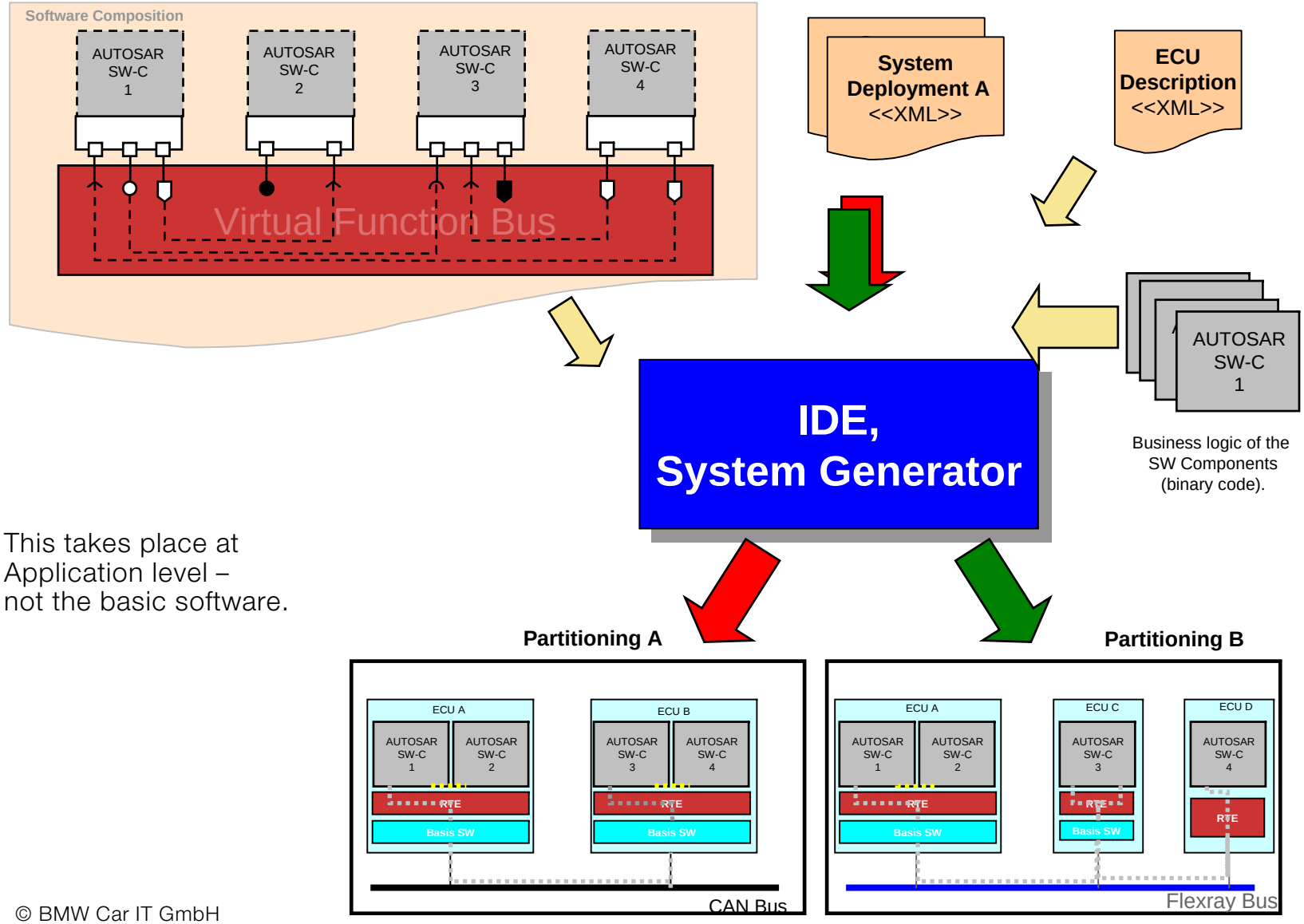

This takes place at Application level – not the basic software.

© BMW Car IT GmbH

AUTOSAR - First Experiences.

A subset of the Virtual Function Bus.

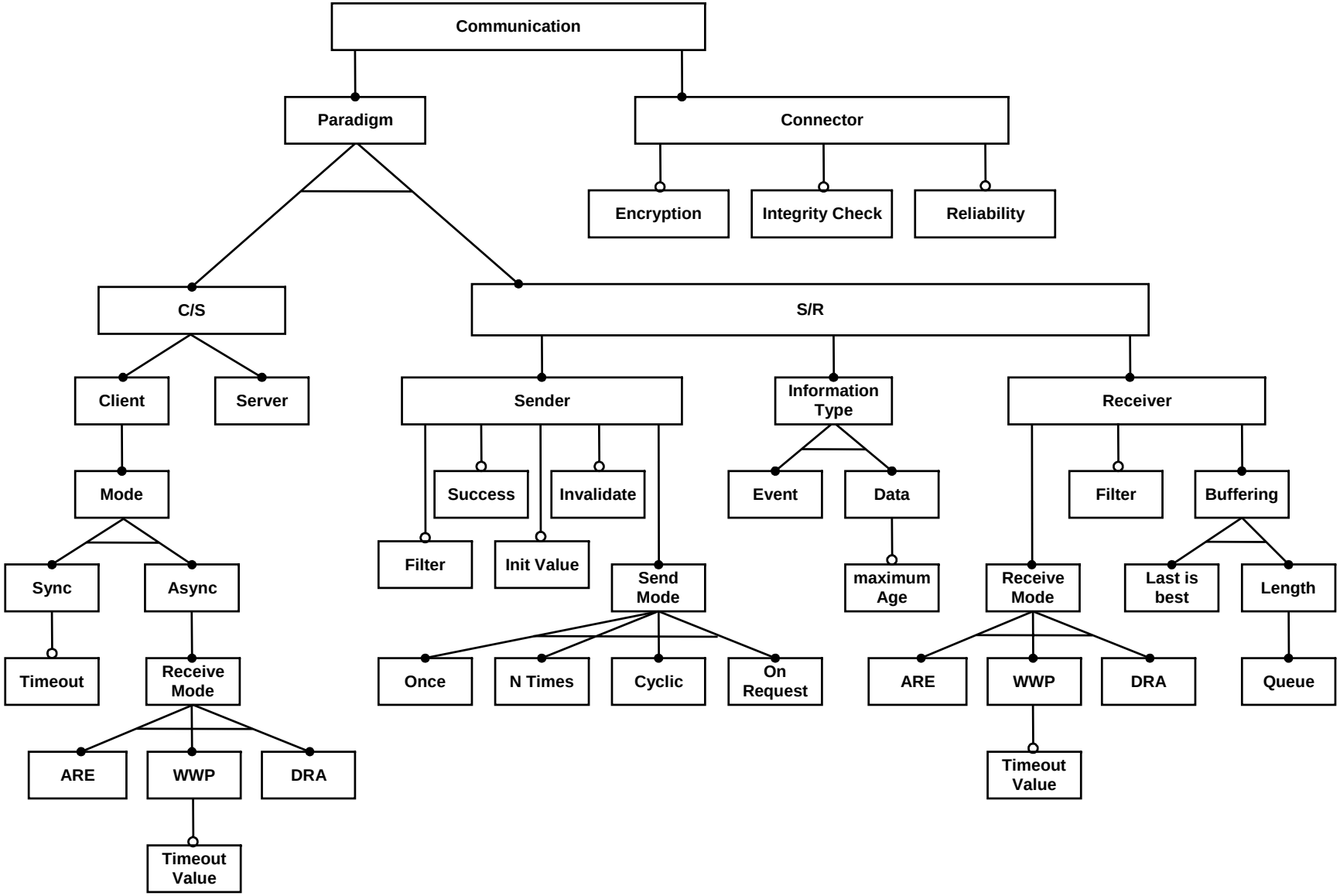

© BMW Car IT GmbH

AUTOSAR - First Experiences.

„Proof of Concept“ (June 2004).

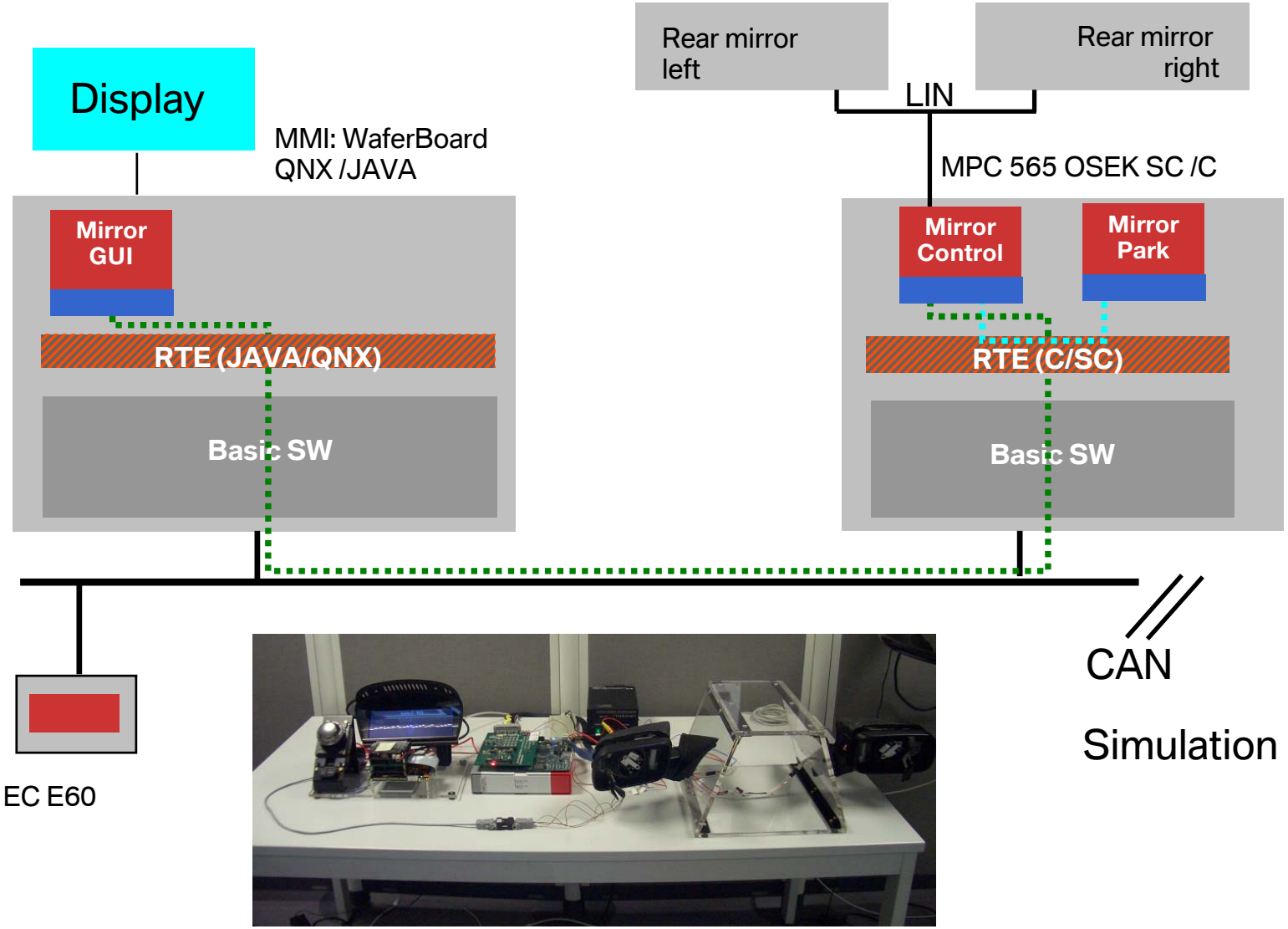

© BMW Car IT GmbH

AUTOSAR - First Experiences.

AUTOSAR Architecture.

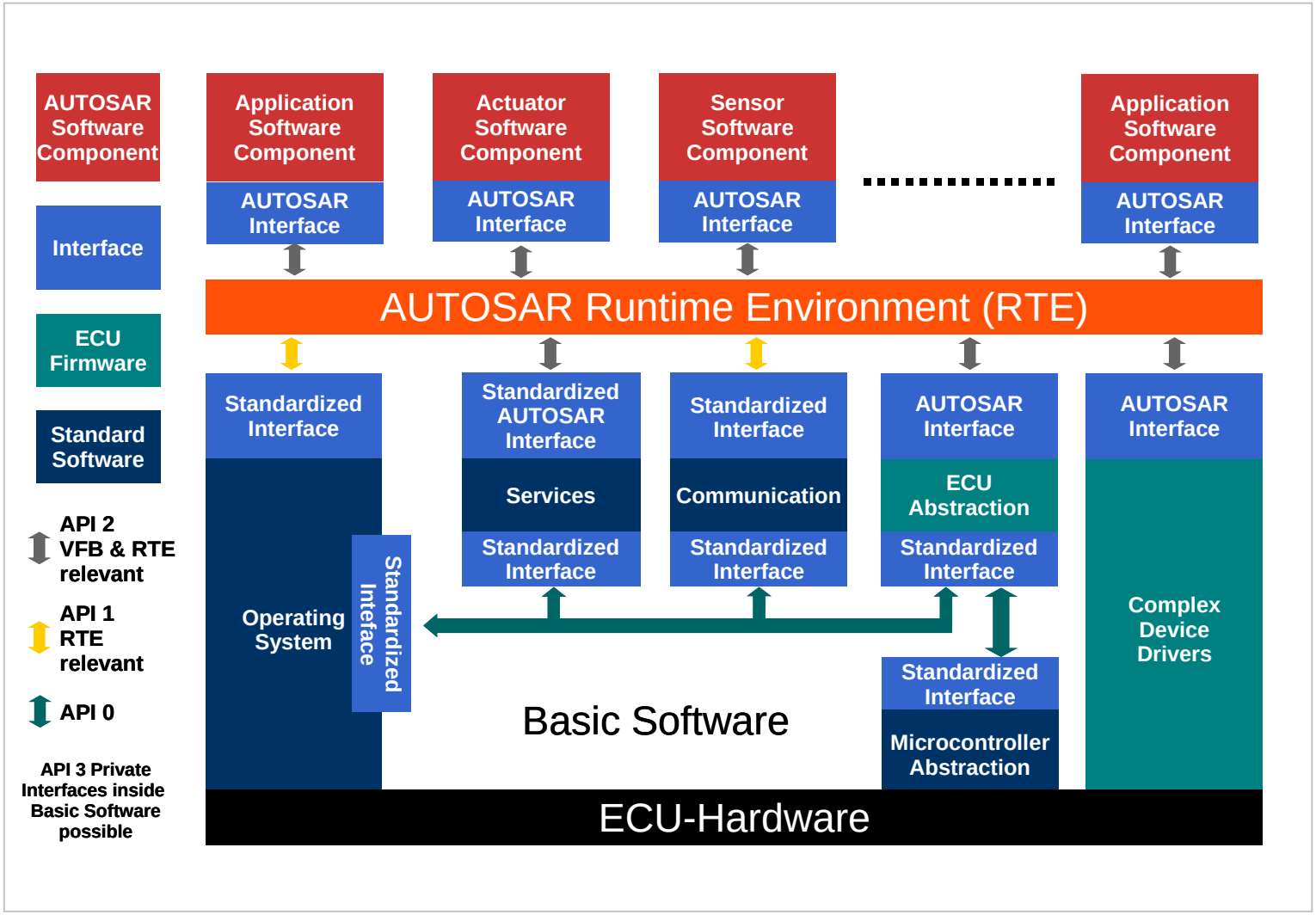

source: www.autosar.org

© BMW Car IT GmbH

AUTOSAR - First Experiences.
Architecture of the BMW SC/RTE.

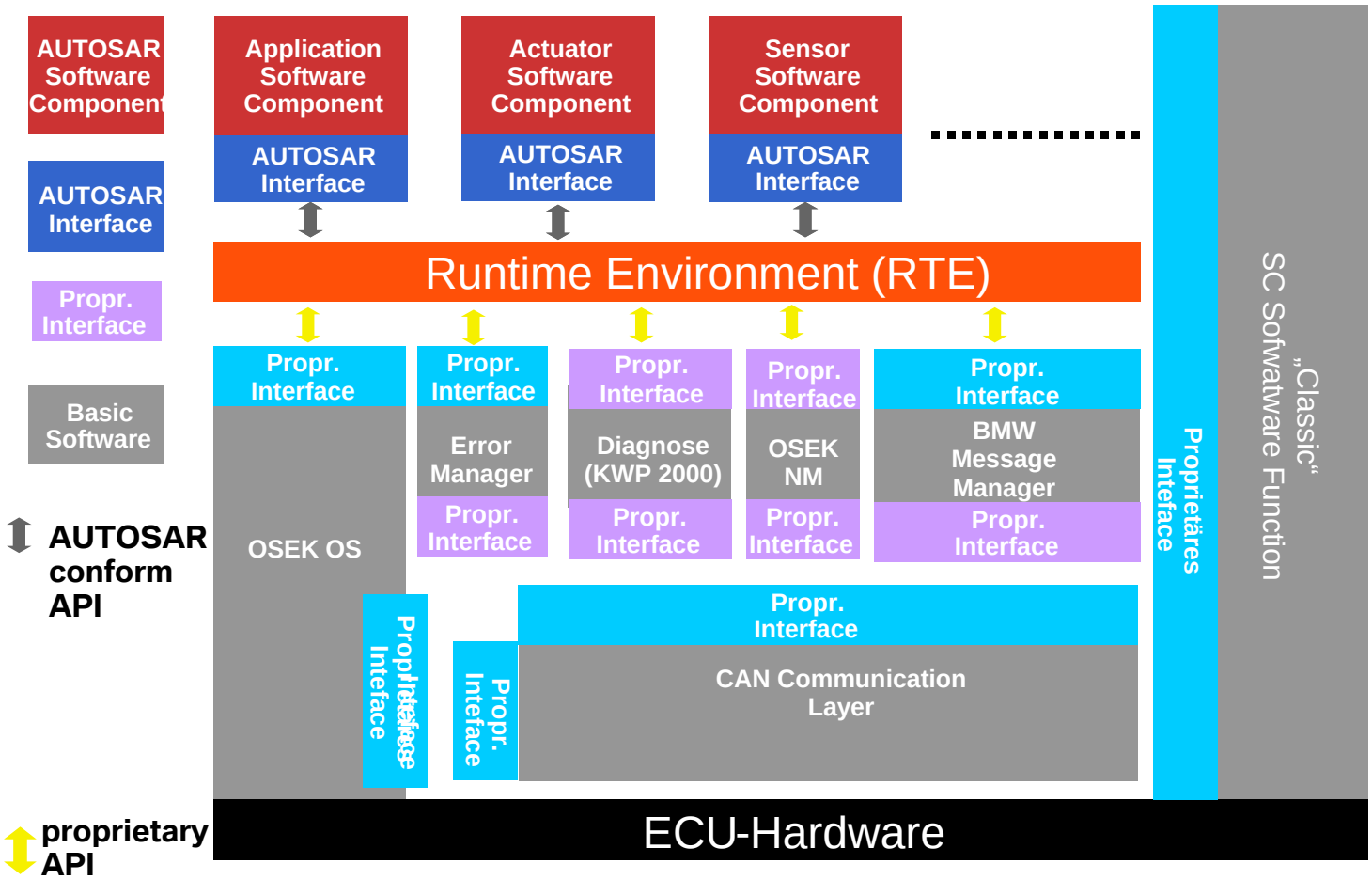

© BMW Car IT GmbH

AUTOSAR – Migration Strategy.

A stable subset of the VFB for migration.

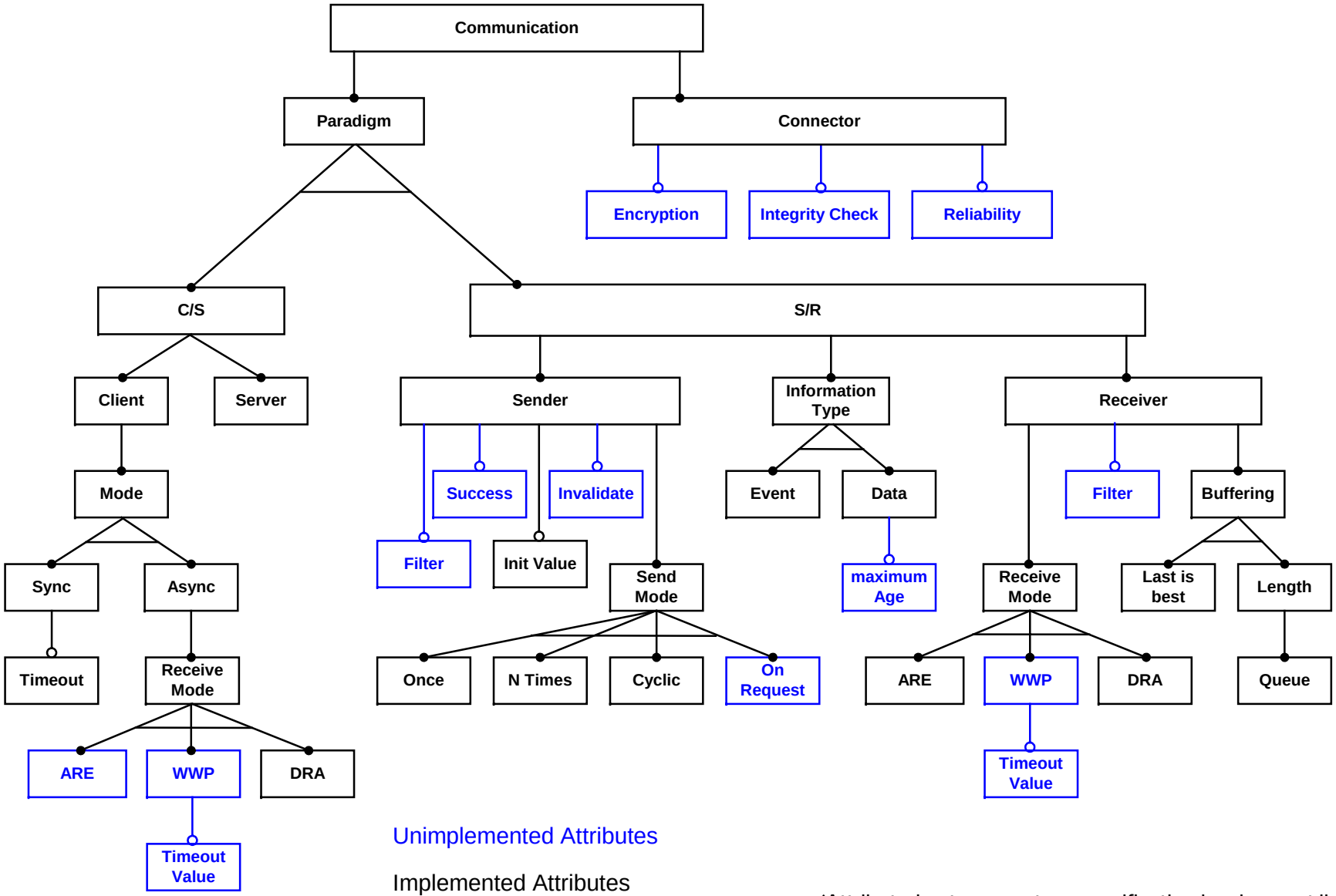

Unimplemented Attributes

Implemented Attributes

(Attributed not on a mature specification level are not listed)

© BMW Car IT GmbH

AUTOSAR – Migration Strategy.

Migration at SW-component level.

RTE based SW Components are migratable with an calculable amount of adaption.

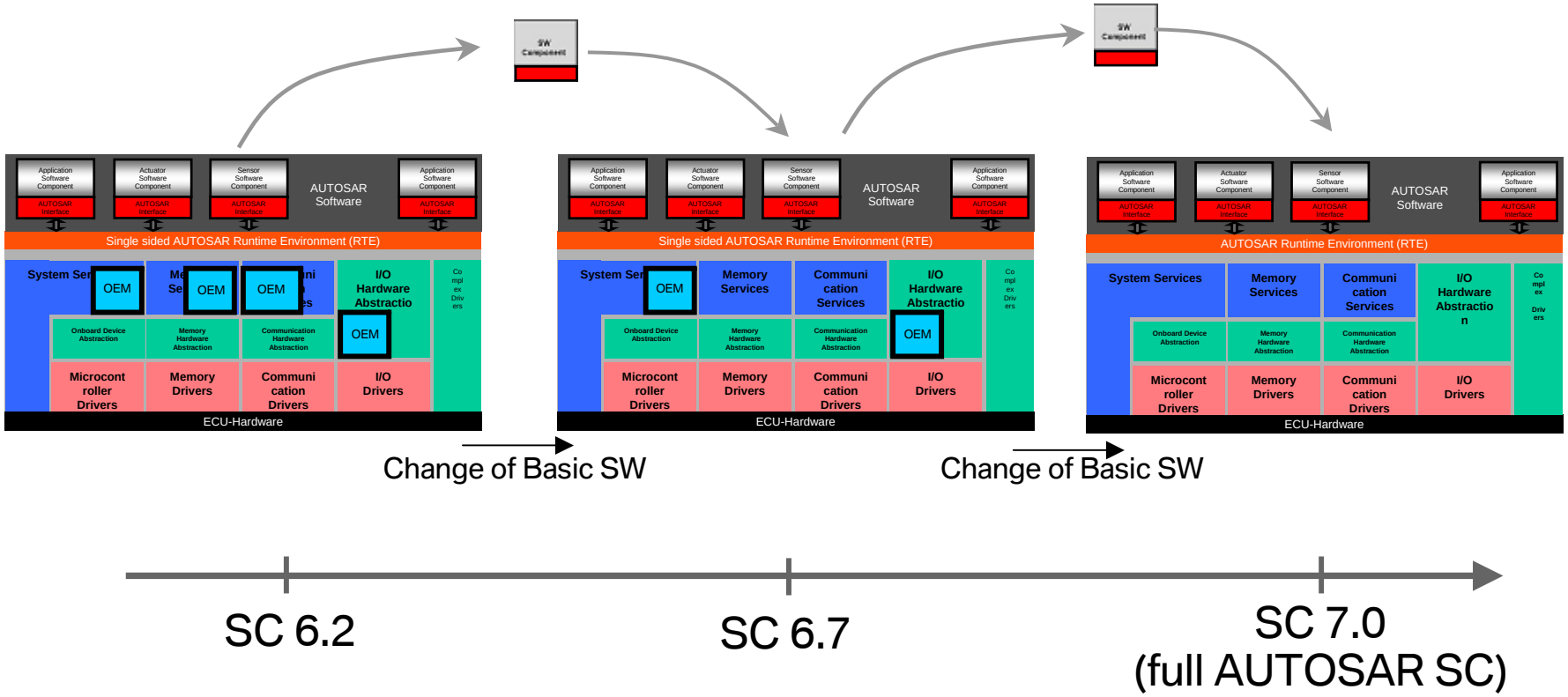

SC 6.2 — SC 6.7 — SC 7.0 (full AUTOSAR SC)

An application, coded against the RTE interface, can be migrated up to the fully compliant AUTOSAR standard core.

„Stepwise Migration of Software Level

© BMW Car IT GmbH

AUTOSAR – Migration Strategy.
RTE against an existing COM Matrix.

AUTOSAR Vision:
From the partitioning to the COM matrix.

Status Quo:
From the COM Matrix to the ECU interface

Ergo: „AUTOSAR brings up a new reuirement for migration: generating an RTE against an existing COM matrix “

© BMW Car IT GmbH

AUTOSAR – Migration Strategy.

Migration into an existing board network.

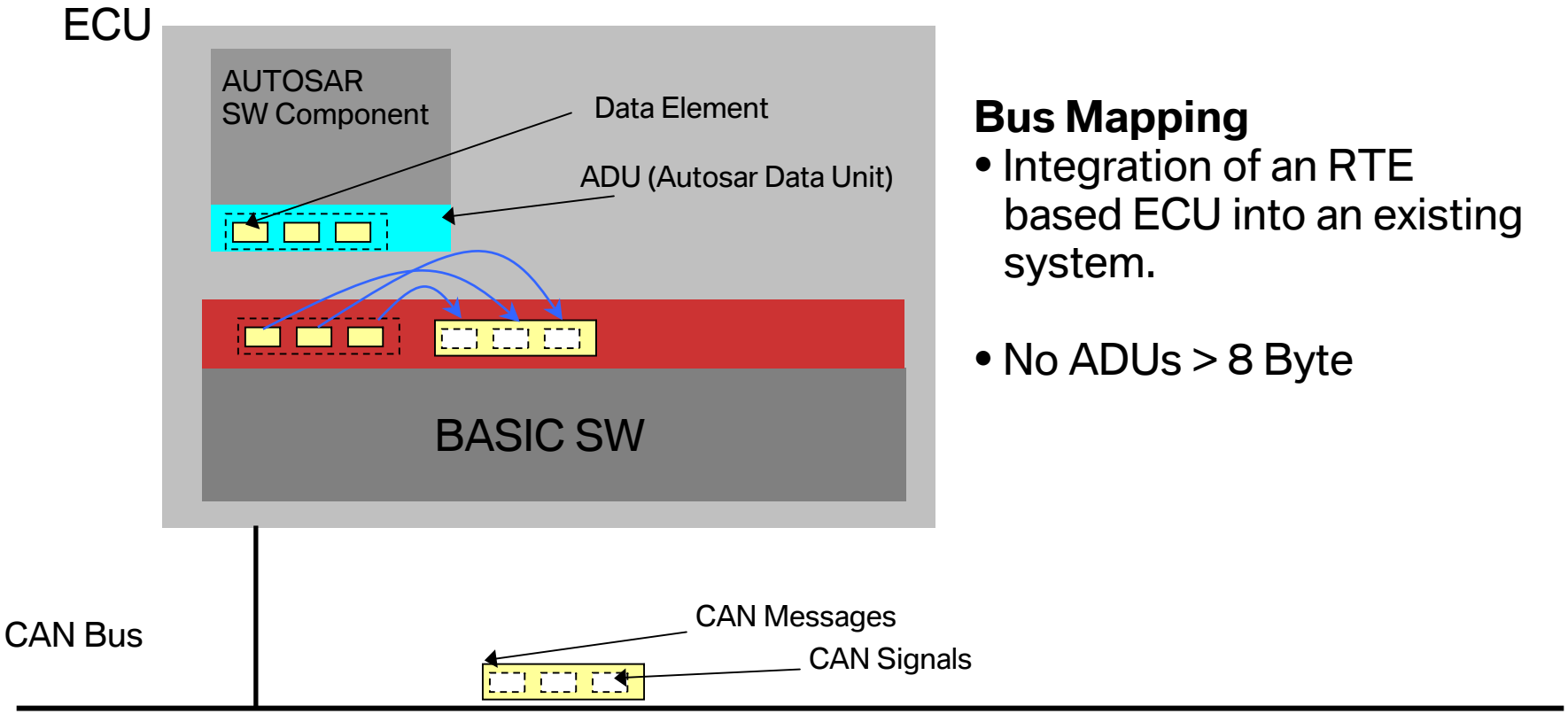

Bus Mapping

- Integration of an RTE based ECU into an existing system.
- No ADUs > 8 Byte

© BMW Car IT GmbH

AUTOSAR – Migration Strategy.

Migration into a board net.

The RTE based ECU behaves towards the bus exactly like a „classical“ ECU

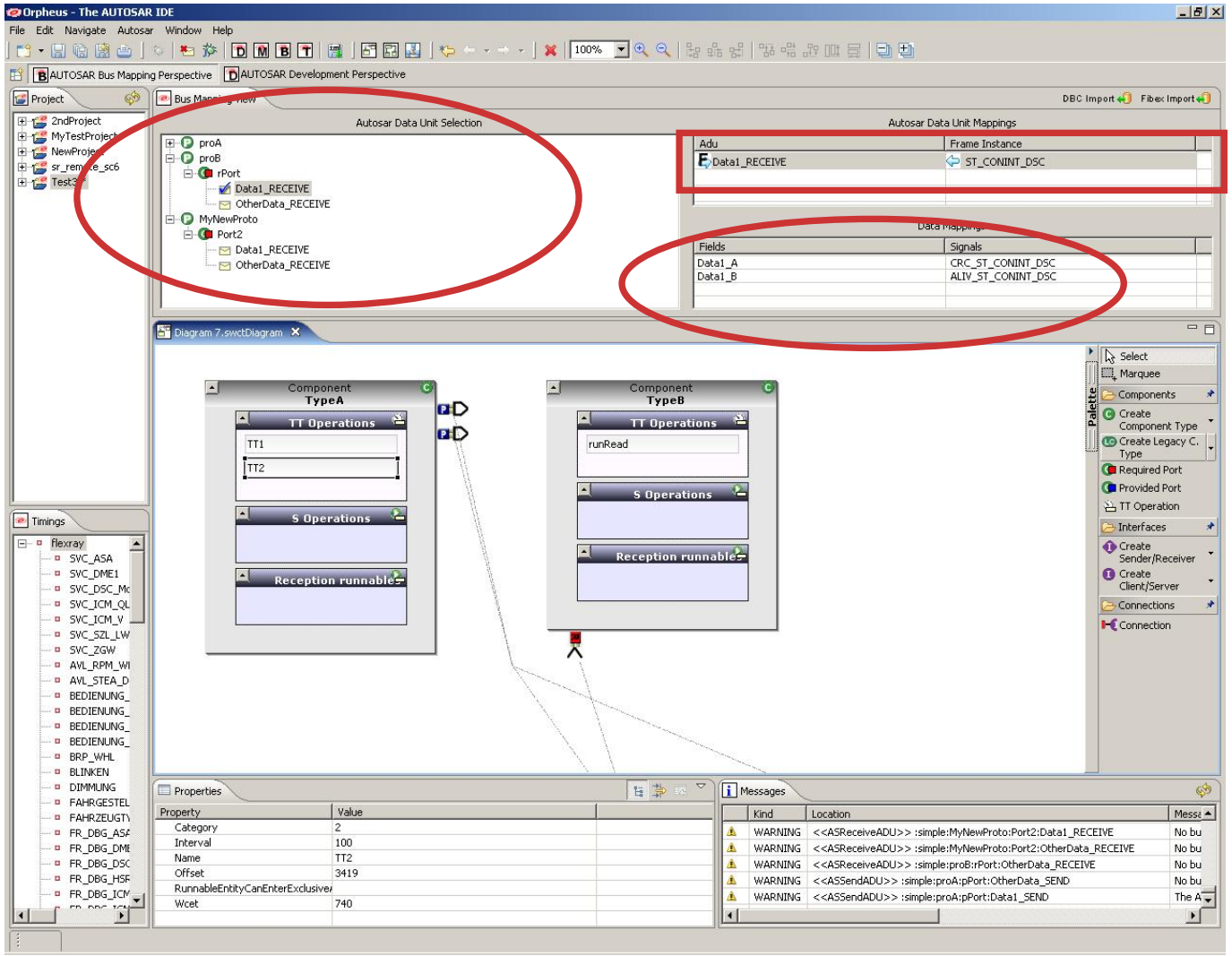

„stepwise migration of ECU level

© BMW Car IT GmbH

AUTOSAR – Migration Strategy.
ORPHEUS.

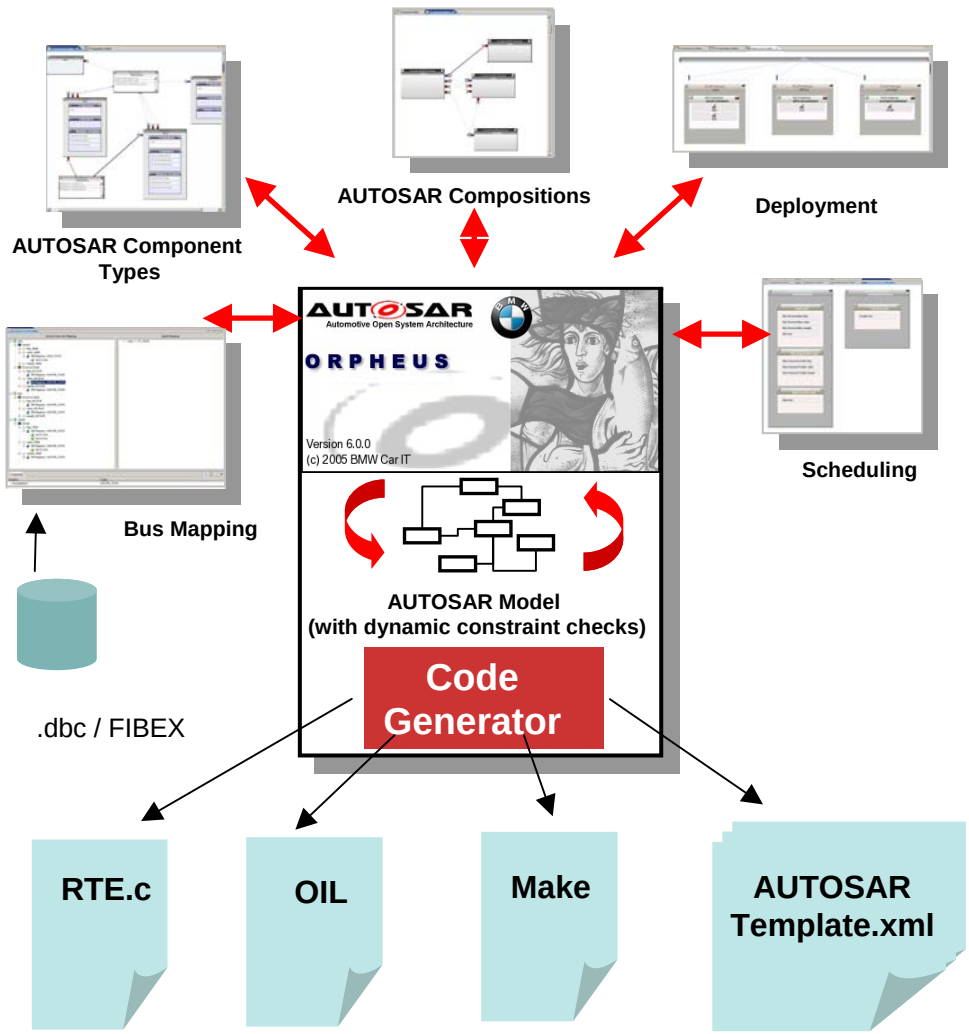

ORPHEUS = modeling tools + code generator

- **Enabler for migration**
  Integrated in BMW SC6,
  Import DBC/FIBEX

- **Graphical Modeling** of
  - AUTOSAR Application Components
  - Mapping to CAN and Flexray Bus
  - Scheduling
  - Partitioning of Software

- **Optimized Codegeneration** of RTE
  (incl. autom. Unit Tests)

- **Open**
  (Adation to ASCET, AUTOSAR Templates)

© BMW Car IT GmbH